

CATALINA ISLAND PERGOLA

We have over 25 years experience making a simple process-- from Designing your dream Pergola with us to Installation. Let us know how you'd like your Catalina Island Pergola built and our experienced designers will email you a unique set of drawings. We won't start building until you say “perfect!” Need assembly help? Let us know. Free nationwide shipping (excludes HI & AK).

Need help to choose the correct pergola or pavilion? Click here to download our checklist: From Design to Done.

Description

- **Easy Sizing/Options:** Begin in the Build it Your Way section next to the main photo by entering the size you think will work for the space. Then, check the wood grades and other options. Each Pergola is built your way. Our dedicated team of Design Engineers stay with your ideas until you fall completely in love with the design.The Catalina Island Pergola can be freestanding or it can be attached to your home or building. Each detail can remain a standard option, or be customized as needed. If you want to add a detail or a size you do not see, just say the word.
- **Built to Last:** We are a restorative forestry company. We hand select the best, fattest timbers from our forestlands for your project. Everything is over built with real wood and steel-- we never use plastic/vinyl/ compressed glue/plywood, flimsy hardware or nails. **Nothing lasts longer outdoors than California Redwood.** We have over 25 years experience building, shipping and installing shade structures all over the country.
- **Easy Design/Sizing Support:** Our team of In-house Engineers will mock up a set of drawings unique to your order's specifications, and email them to you within 5 business days. With 20+ years of experience, we've honed our Design-to-Done process so that you can get your order started without having all the details figured out. Let us bring our expertise to the table-- together we can hone the details to give you the best of structure and style. Generally, just a few emails with your Design Engineer is all you will need to get

every detail just the way you want. Start by choosing your favorite style and entering in the dimensions you think will work. Choose each of your options to the best of your knowledge and either request a quote or send in a 1/3 deposit to get the Design process started.

- **Details Matter:** All joints are notched so that your Pergola will never sag, warp, twist, or shrink. Each timber is finely sanded for a silky smooth finish. We use the best sealants on the market. We make the best wood shade structures you can buy. Yes, your Pergola is sturdy enough to hold Solar Panels if you wish. Check out our competition carefully. Does any other manufacturer offer up to 30 year decay warranties?
- **You Install or We Install?:** Once you sign off on your drawings, your Pergola is fully erected and finely finished in the shop. All the hardware is included. Just bolt the timbers back together. See the Assembly & Care tab above for more information.
- **Our White Glove Assembly is available in all 50 states.** If you'd like us to do the assembly for you, we can send our installation team anywhere in the US. Just choose the White Glove Assembly option as you check out. This service includes assembly, anchoring, and details like adding flashing, curtain rods and roofing. White Glove Assembly costs anywhere between 25-45% of the cost of your structure. We are happy to provide a specific quote for you during the Design process as we finalize the details together. If you have an old structure that needs to be taken down and disposed of, let us know. We can generally add this to the scope of work.
- **Turnaround Time & Financing:** We can build in 2-3 weeks, but we recommend ordering 2-3 months in advance to give you time to fine tune each detail via our design and drawing process. You can take advantage of our 1/3rd deposit option to spread the cost over several monthly payments.

Questions? - Download the ebook "Everything you Wanted to Know about Pergolas" for answers to frequently asked questions or contact us.

Specifications

GENERAL INFORMATION ABOUT PERMITTING FOR PERGOLAS AND PAVILIONS

Dimensions & Drawings (Provided Prior to Construction)

When we receive a Pergola order, we first provide you with a detailed set of drawings based on the options and sizes chosen. The drawings will clearly show every detail and dimension from 3 different angles. They are an excellent tool for you to double check everything, making sure all is exactly as you'd like before beginning the building process. Drawings are emailed within 5 business days, and we'll revise your drawings as needed to make sure all details and sizing issues are perfected prior to beginning construction.

Below are some examples of drawings sent to prior customers:

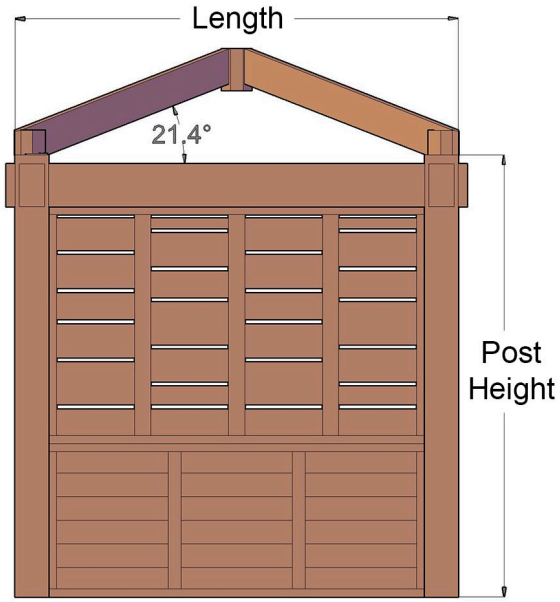

Length View

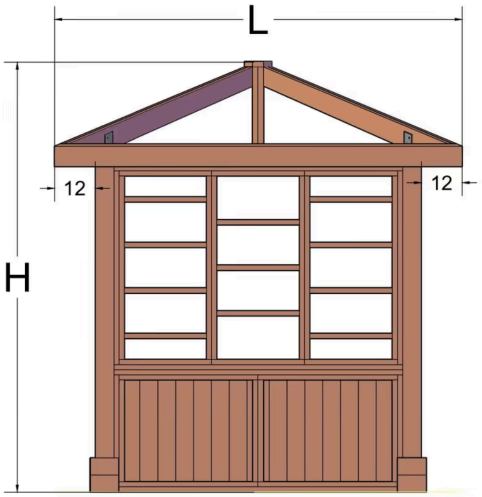

Length View

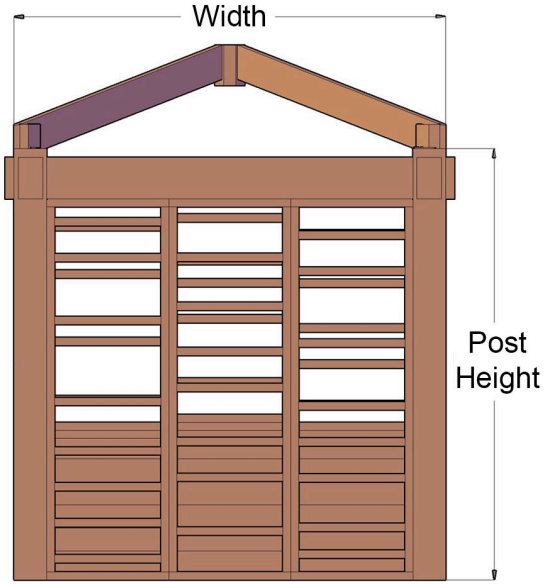

Width View

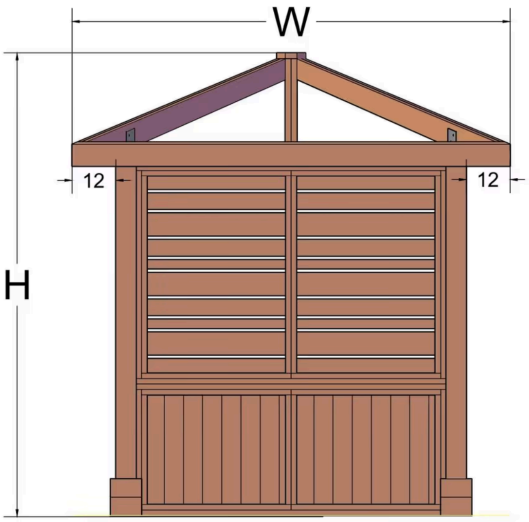

Width View

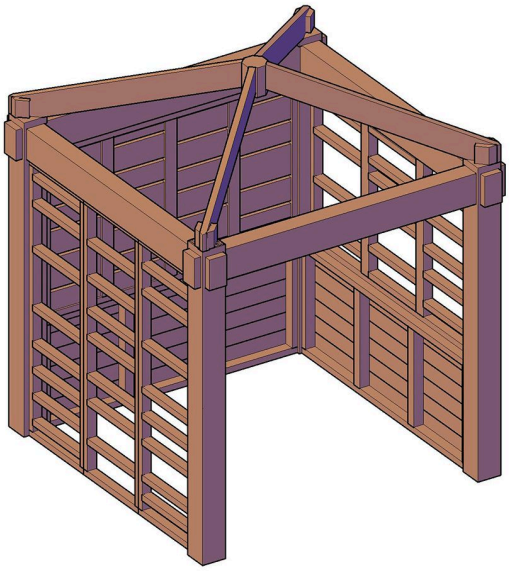

Isometric View

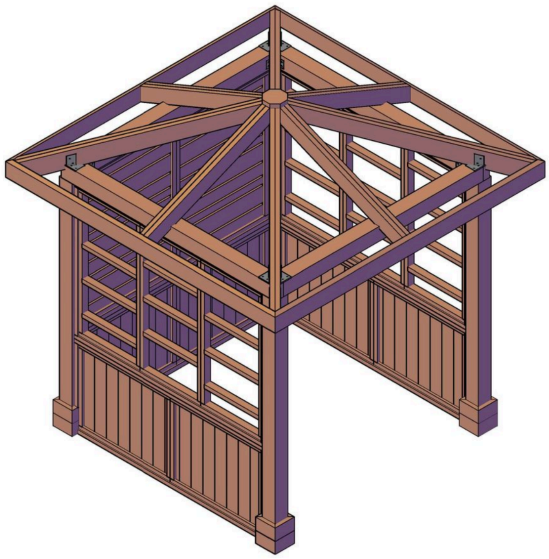

Isometric View

The maximum roof size is 20' in either direction with a 4 post structure.

Each Catalina Island Pergola is completely assembled in the shop prior to shipping to be certain that everything fits together perfectly. All timbers are notched into one another to increase structural strength and to lock all your pergolas timbers in place so that they will never sag, twist or move. There are hundreds of notches in the larger pergolas. Full notching is rarely practiced because it is labor intensive, but it is one of the secrets to a long lasting and beautiful pergola.

All assembly hardware is included and is stainless steel.

Ceiling Fan Bases

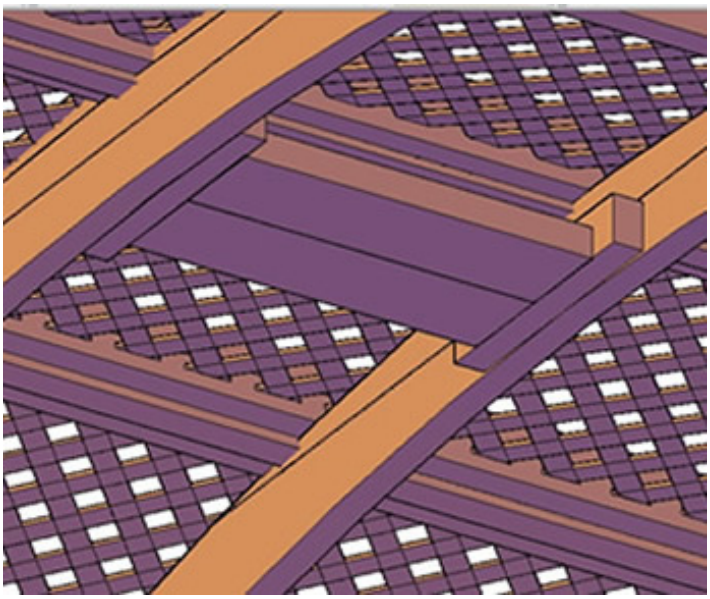

Ceiling Fan Base Drawing



Ceiling Fan Base



Roof Fan



Pavilion with 2 Ceiling Fan Bases

Attach the Ceiling Fan base between the rafters with 4 bolts (two per side). The paddle fan is usually placed in the center of the Pergola's ceiling, but of course, you can place it almost anywhere you have sufficient head space.

Many customers have told us that by far the best manufacturer is a company out of Kentucky called the **Big Ass Fan** Company. Funny name, greats fans. They move a lot of air, are quiet and are probably the best in the business.

TV Mount Bases

TV MOUNT BASE VARIATION

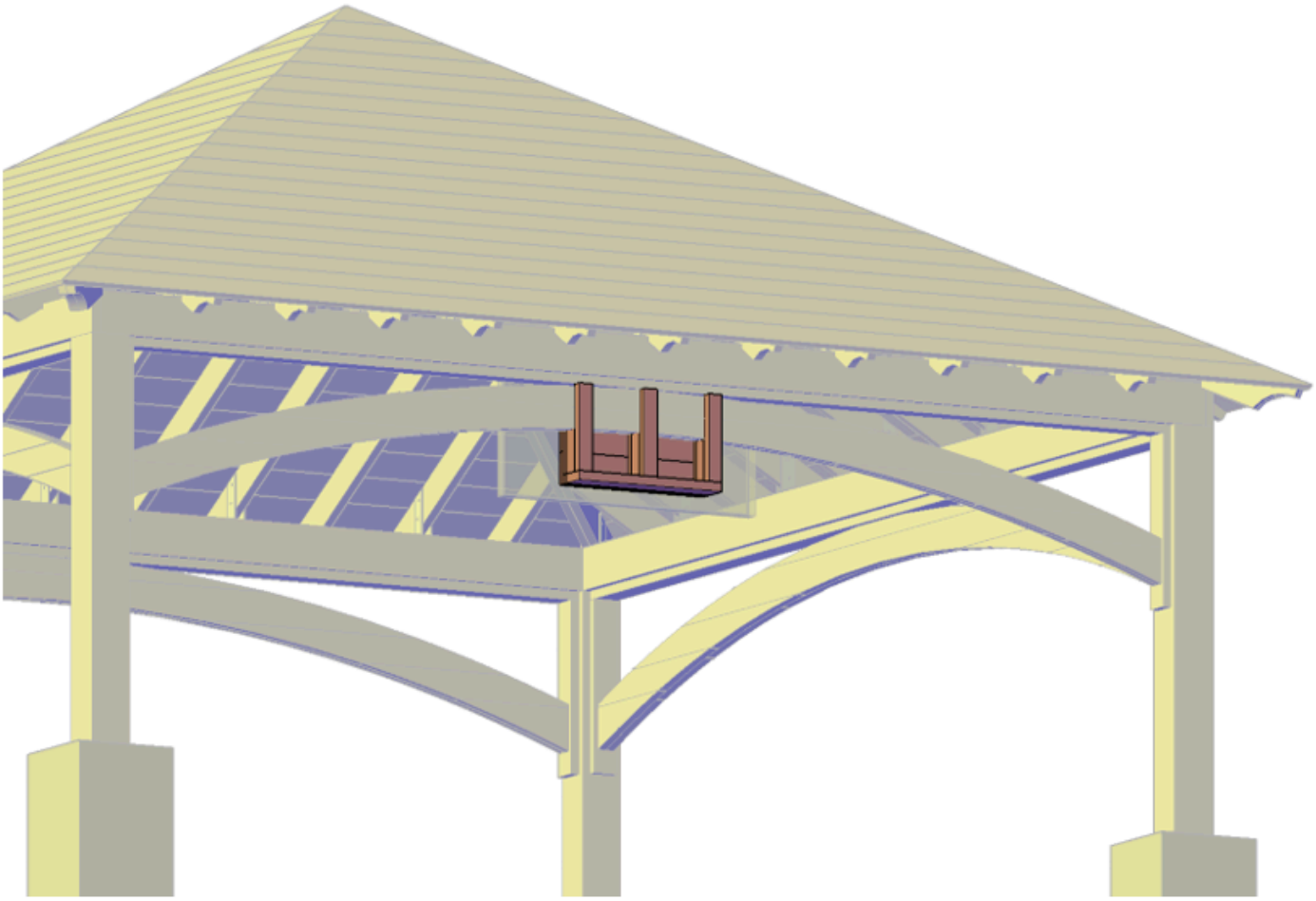

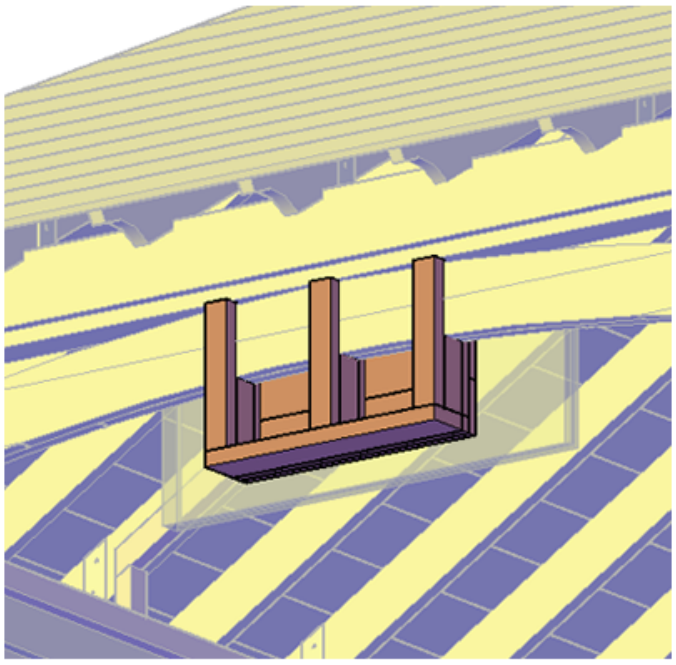

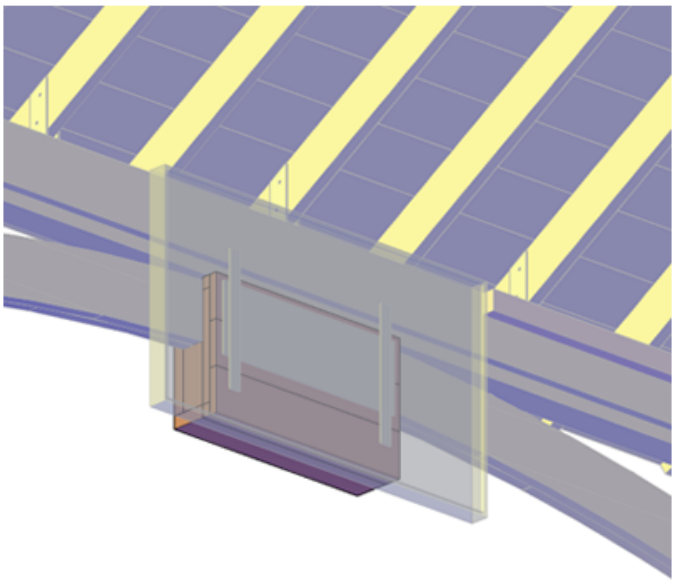

TV MOUNT POST VARIATION

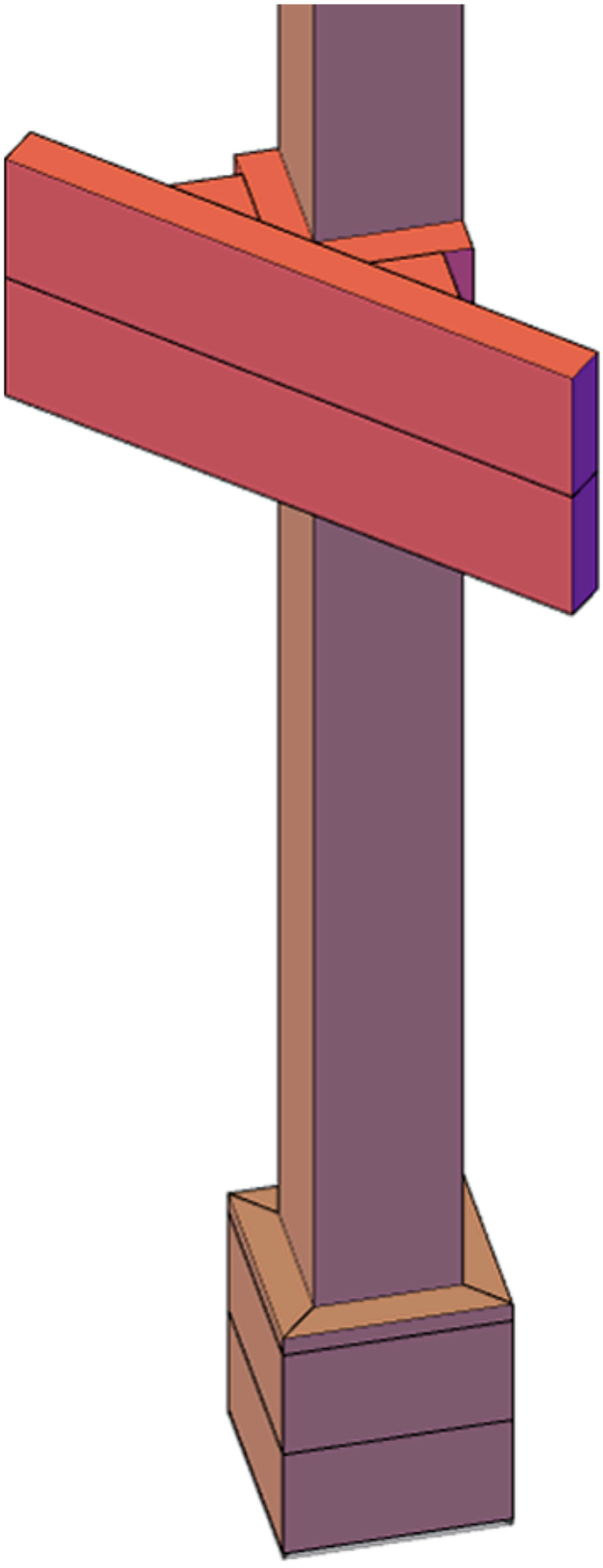

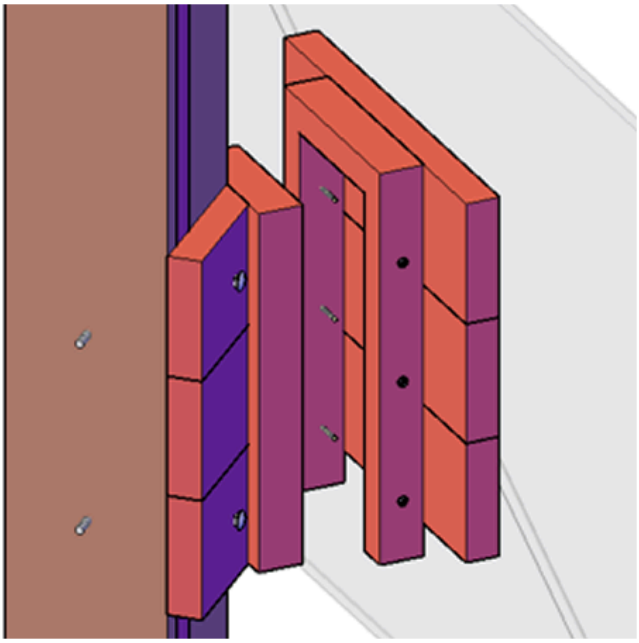

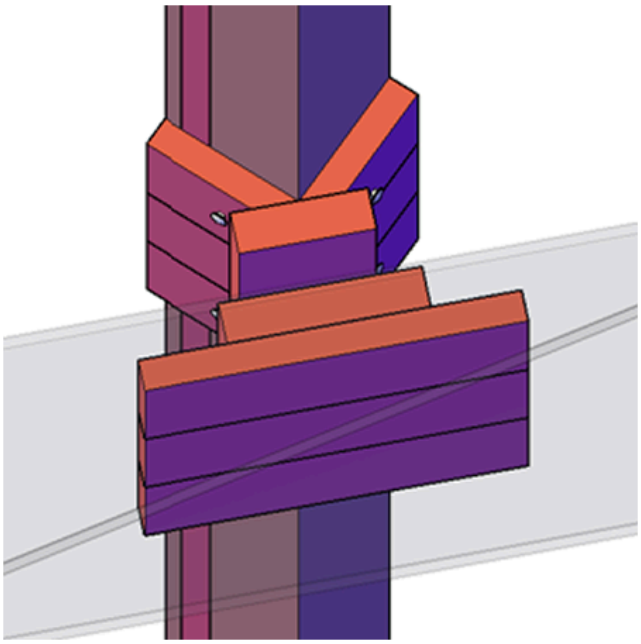

Accessory Bases & Shelving

If you are planning to add a heater, a chandelier, a bug zapper, custom shelving or any special detail, please select at least one base from this option. Once you place your order, your designer

will ask you about the specifics of your planned accessory or accessories.

They will then draw the accessory and work with you to figure out the best placement under your structure so you can review and refine to make sure it will work perfectly. The bottomline is we don't recommend you leave details like the accessories as an afterthought.

You don't want to have to build bases or hide wiring with locally sourced wood that will not match your structure and most importantly, you want to be sure your planned accessories will look right and work functionally and the drawing process is the perfect tool to work all this out. Oftentimes, you have to adjust the height or other detail of the structure to make the planned accessory work right.

Don't worry about selecting the right amount of the Accessory bases or shelving options. During design you can add or subtract as many as you need.

Post Height

The standard pergola/pavilion height is usually 9ft. and 90% of our installations are this height. Attached to ground level a 9ft post will create an 8’ 4” ceiling height under the rafters. We also offer post lengths from 8.5 ft, 9 ft, 9.5 ft, 10 ft, 10.5 ft, 11 ft, 11.5 ft and 12 ft. Note for any of these your ceiling height will be 8 inches less than the post size selected.

For this size or any custom length, just note the size you want in the Comments/Special Request section. We’ll contact you if it changes the pricing of your pergola.

Electrical Wiring Trim Kit

If you plan to run wiring to add lights or a fan or two to your Structure, we can add a cutout to your timbers and add a trim piece that will hide the electrical wiring beneath it (see drawings). The trim is placed on the interior side of the Post or centered to the Post (depend the thick timber) or added to Roof Supports. It is attached with finish nails for a smooth finish.

If you only want to add it to just one or two posts, please let us know in the Comment box which posts you'd like them on. They will be included in your Structure drawings that will be emailed to you within 5 business days of receiving your product order. At that point, you can make any adjustments in case the trim was place on the wrong post or posts.

For electric wiring trim cut, these will be subject to the dimensions of the poles and their position on one of its faces, the following sequence of images illustrates which poles are and the dimensions of the corresponding cuts.

Standard Cut Measurements

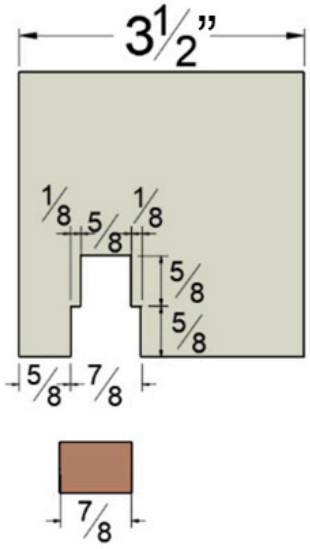

Electric wiring trim cut measurements for 4" x 4" Post thickness

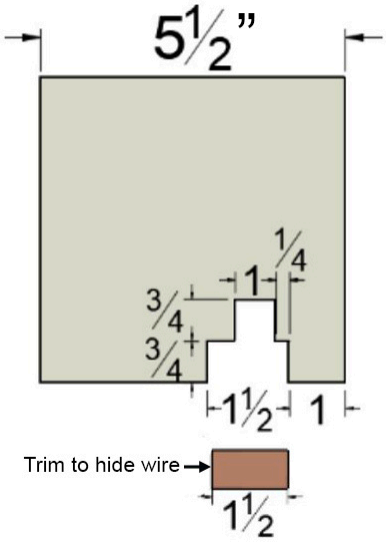

Electric wiring trim cut measurements for 6" x 6" Post thickness

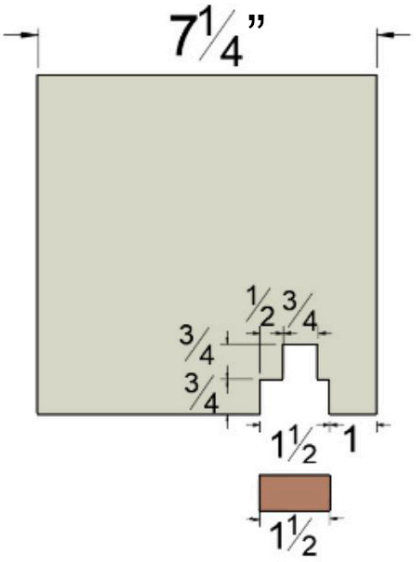

Electric wiring trim cut measurements for 8" x 8" Post thickness

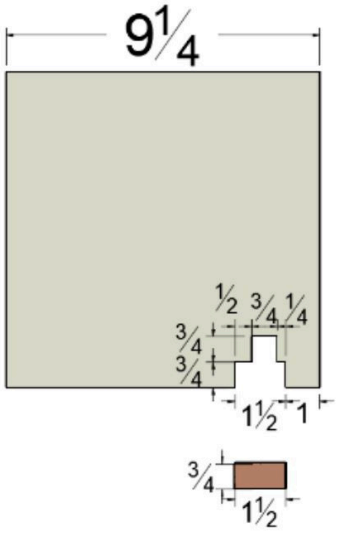

Electric wiring trim cut measurements for 10" x 10" Post thickness

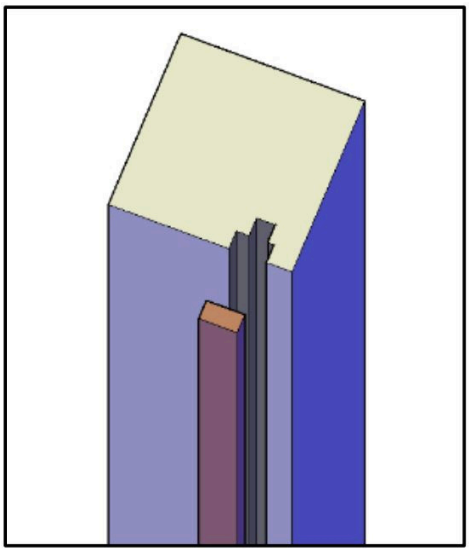

Functioning

Center Cut Measurements

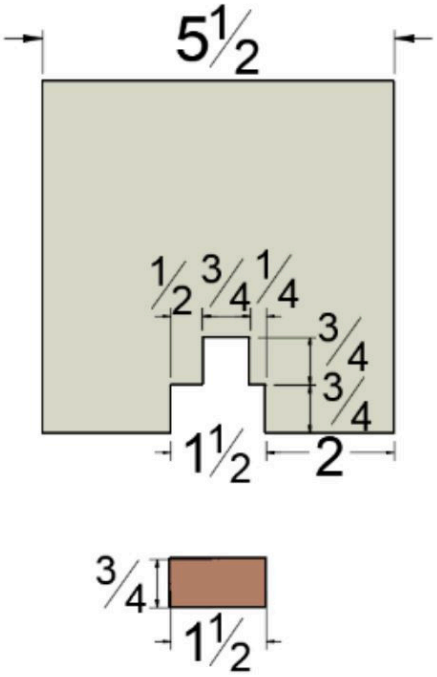

Electric wiring trim cut measurements for 6" x 6" Post thickness

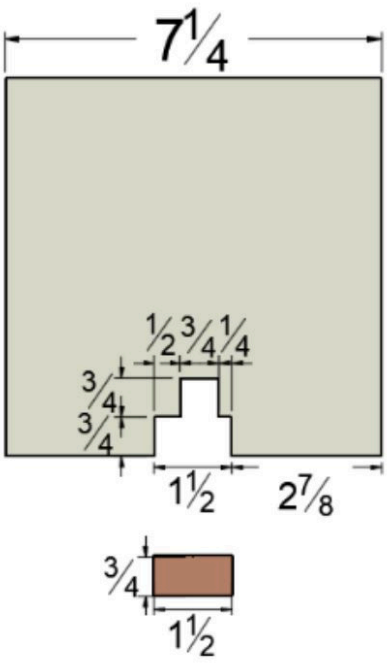

Electric wiring trim cut measurements for 8" x 8" Post thickness

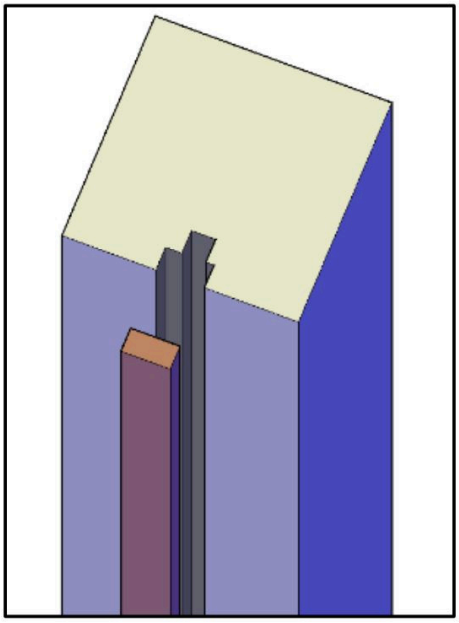

Functioning

Post Decortive Trim



Standard



Vertical



Horizontal

Bolts Material Type



Zinc Bolt & Screw



Galvanized Bolt & Screw



Stainless Steel Bolt & Screw

Stainless Steel Post Anchoring

All posts should be attached to the ground. Below are the most common scenarios.

To anchor your posts for decades to come, we recommend stainless steel anchors and bolts. Our anchor kits, whether for concrete or wood decks, come with everything you need to attach your structure securely.

Standard Anchor Kit

The stainless steel anchors sit on the surface and attach using either 4 expansion anchor bolts (for concrete) or 4 lag bolts (if attaching to a wood deck). The posts sit in the anchor's saddle and are attached to the anchors with lag bolts provided. A wood trim box is included to hide the hardware from view (see anchor kit installation images below).

For paver, stone or flagstone patios we don't recommend attaching directly to these surfaces because you may have cracking or movement long term. Instead, we recommend installing footings (concrete foundations for the posts) to make sure you have zero issues long term.

For most applications, we recommend digging holes 30" deep (in snow areas adjust depth to go below the frost line by 6"), place cardboard Sono tubing in the hole up to ground level (see anchorage table 1 to know the diameter). Then pour concrete flush to ground level (or level with the walking surface area of your paver or flagstone patio). Allow up to 3 days for the concrete to cure before attaching metal anchors at the top of the concrete pour (see below). You can use fast drying concrete if you don’t want to wait.

To avoid posts to wick up moisture, we add spacers to the anchors, so the posts will sit ¾” from the ground level. We also add acrylic at the bottom of the trim boxes, so the boxes don’t sit directly to the ground (see photos below).





Instructions for Standard Anchor Kit Installation:

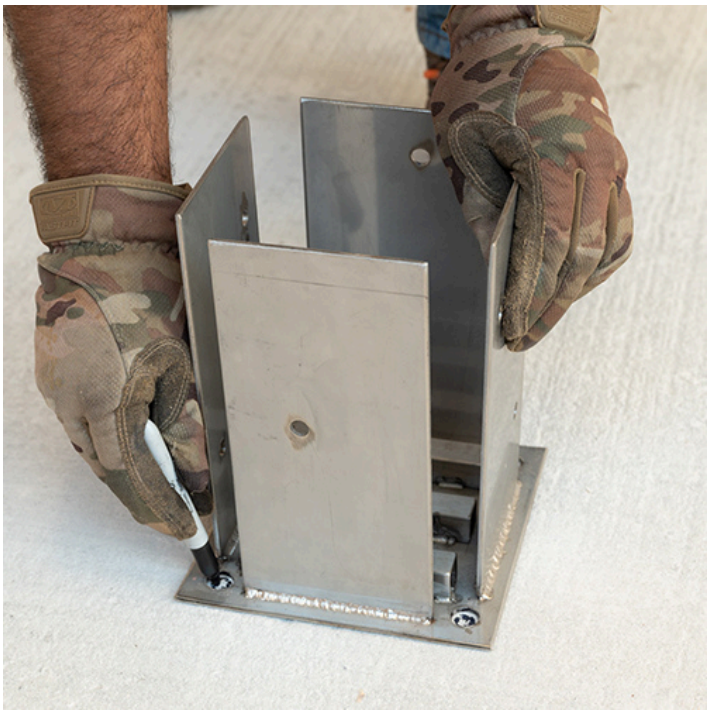

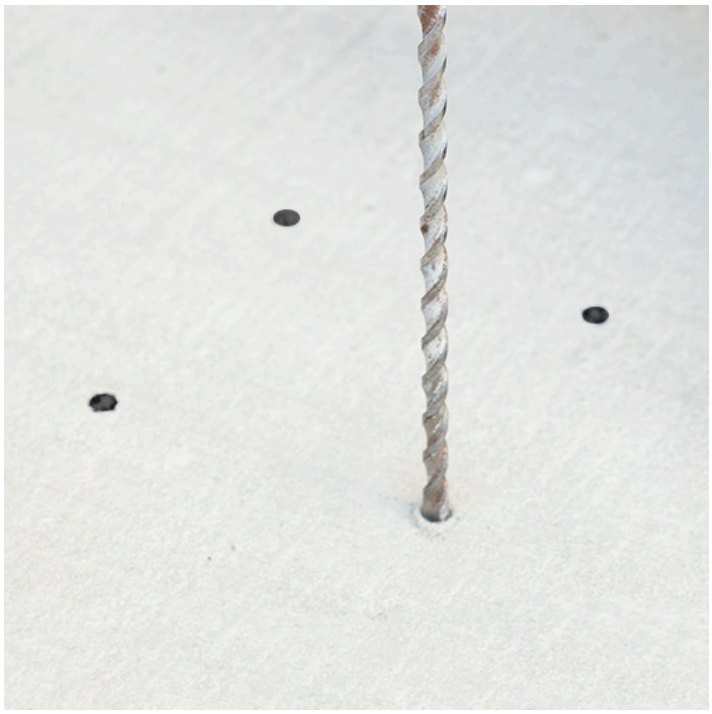





STEP 1:
Place the anchor where it will be installed; mark the ground as shown.

STEP 2:
Drill for holes as shown 1/2" wide hole 4" deep and hit down the anchor bolts (1/2" x 4") with a hammer. Then take off the nut before you place the metal anchor **(note: for wood deck use lag bolt).**

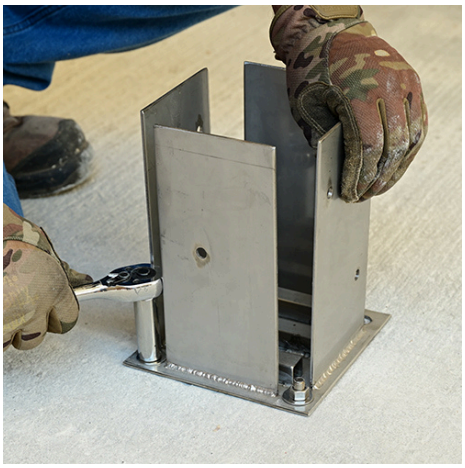











STEP 3:
Place and attach metal anchor to concrete with anchor bolt *(1/2" x 4")* and place the post.

STEP 4:
Drill holes to the post and attach it to metal anchors with lag bolts *(5/16" x 3")*

STEP 5:
Place the wood boots over the anchors, fixed it with the screws.

The photos above show the 5 simple steps to follow once your surface below the Structure is in place. Choose the anchor kit for the appropriate surface:

- **Stone, Brick or Concrete - Anchor Bolts** (1/2") for attaching to stone, brick, or concrete.
- **Wood (e.g., Wood Deck) - Lag Bolts** (3/8") for attaching to a wood deck.

Read more about anchoring your Structure in our FAQ, including the best grade of wood to choose for your climate.

More technical details:

Ideally Confirm your Structure Drawings prior to laying foundations – especially for paver or flagstone patios.

By confirming your Structure drawings first you may realize that you overlooked something or you may want to make a change that will affect the length or width. For example, for a standard 10' x 12' Arched Pergola Kit, the posts are recessed back 12 inches from the edge of the roof. This places your posts at 8' x 10' to the outside 4 corners of the posts and at 7' 6 1/2" x 9' 6 1/2" on center. If you are certain this is what you want, you can do the footings before ordering your

Structure and before you receive your drawings for your order (all Structure orders receive drawings within 5 business days for your review to give you the time and tool to make adjustments before building). Often, when customers see their drawings, they decide to change some detail like adding more space between the posts or going taller.

If you are in the process of laying a foundation for a Structure that will require footings (recommended for flagstone or paver patios), it is best to have the design finalized so that you or your contractor can place the footings in the exact location. Once footings are installed you will not be able to move the post positions causing yourself an unnecessary headache.

Paver or Flagstone Patio Installation details - If you are placing your Structure on a paver patio, pour the concrete to be level with the finished pavers. This way, after adding the trim, the bottom of the trim will rest atop the pavers seamlessly. Since the paver patio is usually a few inches above grade, you may have to pour a bit higher than on undeveloped ground to get the post height to line up exactly with the paver height. The design engineer that will be assigned to your project will detail the footings work needed as part of your design work. Below is a typical set up:

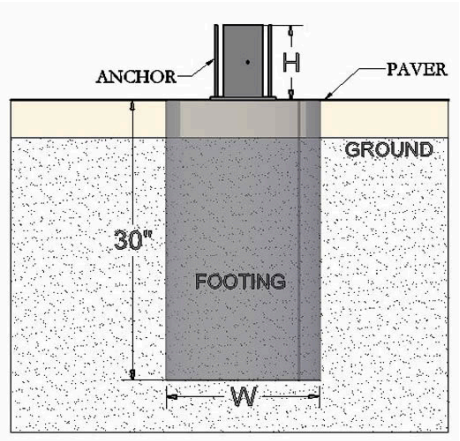

STEP 1:
Attach metal anchors (made with 1/4" thick steel) to concrete with anchor bolt (1/2" x 4")

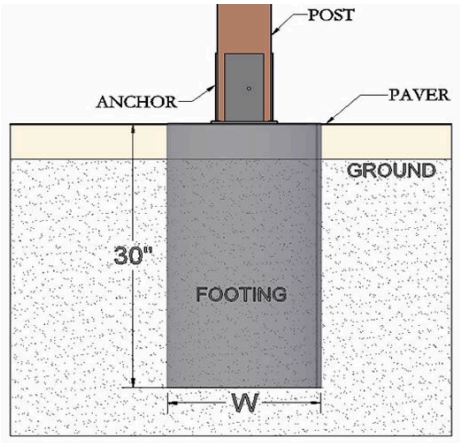

STEP 2:
Attach post to metal anchor with lag bolts (5/16" x 3")

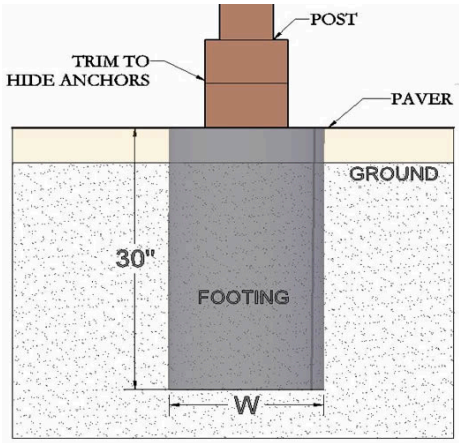

STEP 3:
Add wood trim to hide metal when finished

POST	ANCHOR BASES		FOOTING	
Sizes	Base Steel Gauge	H	W	Deep
3-3/4" x 3-3/4"	1/8"	6"	14"	30"
5-1/2" x 5-1/2"	1/8"	8"	16"	30"
7-1/4" x 7-1/4"	1/8"	8"	18"	30"
9-1/4" x 9-1/4"	1/8"	10"	20"	30"
11-1/4" x 11-1/4"	1/8"	10"	24"	30"

If you decide to order the Anchoring Kit you'll have all the hardware you need and will not need anything from the hardware store if you are attaching to an existing deck. If building on undeveloped ground, just add the concrete and a bit of rebar as described above. Choose the anchor kit for the appropriate surface either wood decking or stone, brick or concrete surfaces.

High-Wind Anchor Kit

Stainless Steel High-Wind Anchor Photos





Stainless Steel High-Wind Anchor and Steel Cage Dimensions

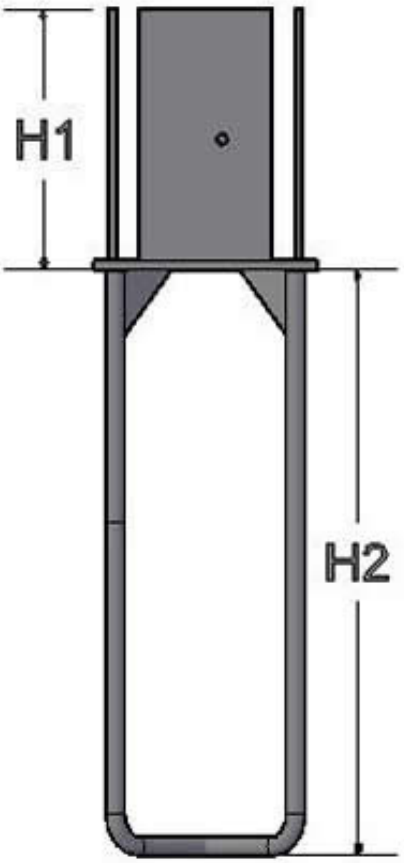
H1
H2

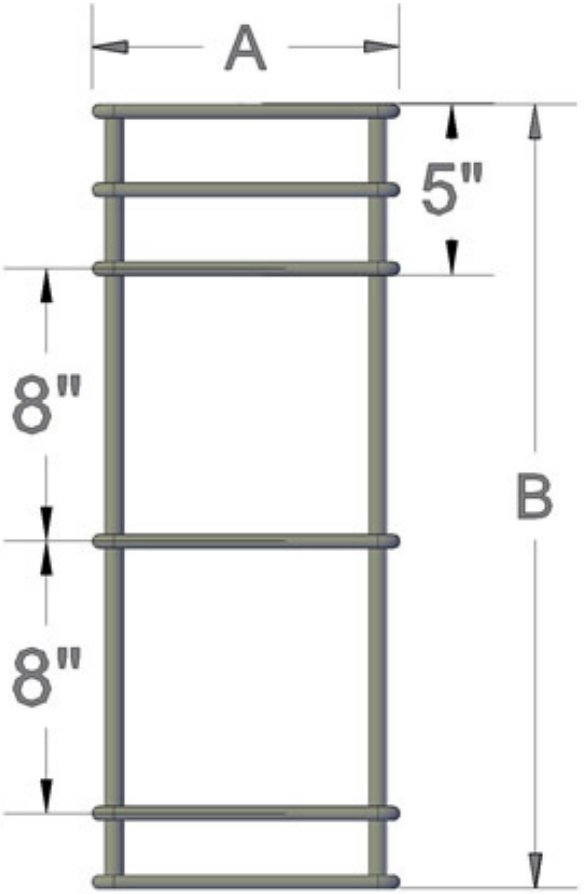
A
5"
8"
8"
B

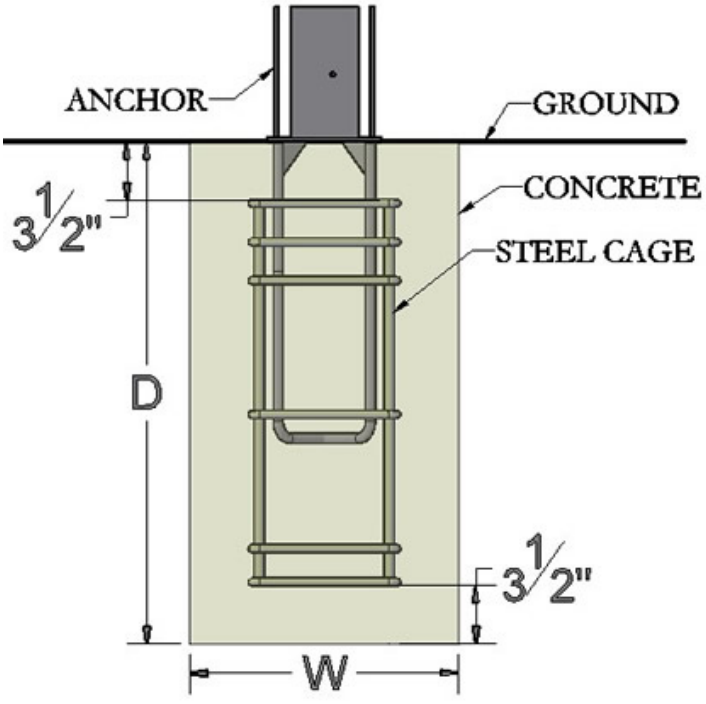
ANCHOR
GROUND
CONCRETE
STEEL CAGE
3 1/2"
D
3 1/2"
W

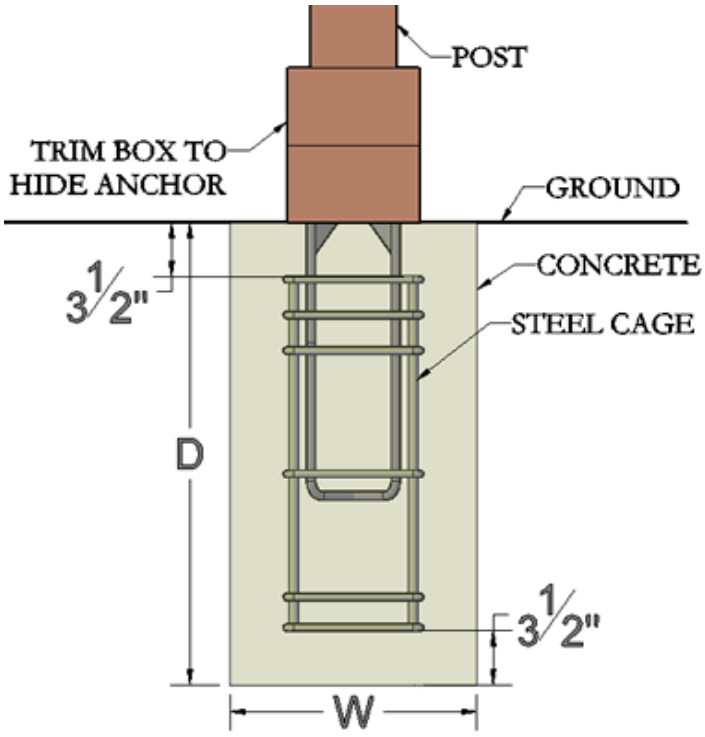
POST
TRIM BOX TO HIDE ANCHOR
GROUND
CONCRETE
STEEL CAGE
3 1/2"
D
3 1/2"
W

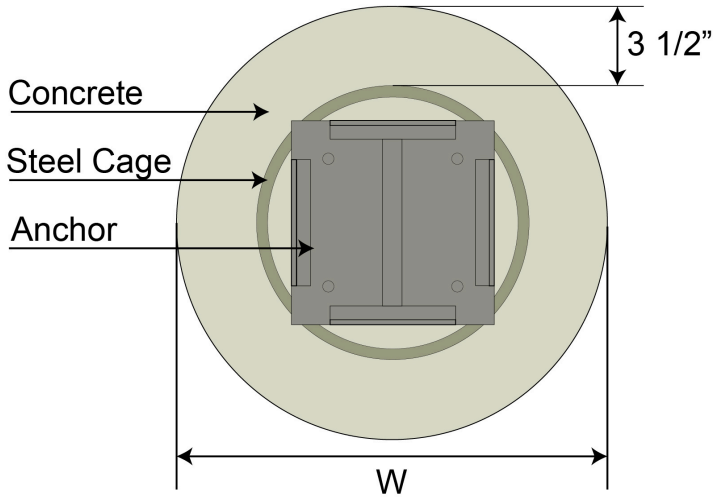

POSTS	ANCHOR BASES				STEEL CAGE		FOOTING	
Sizes	PTR Gauge	Anchor Steel Base (PTR)	Steel Base Diameter	H	A	B	W	D
3-3/4" x 3-3/4"	1/8"	6"	3/8"	12"	7"	23"	14"	30"
5-1/2" x 5-1/2"	1/8"	8"	3/8"	18"	9"	29"	16"	36"
7-1/4" x 7-1/4"	1/8"	8"	3/8"	18"	11"	29"	18"	36"
9-1/4" x 9-1/4"	1/8"	10"	1/2"	20"	13"	35"	20"	42"
11-1/4" x 11-1/4"	1/8"	10"	1/2"	24"	17"	35"	24"	42"

Note: At least 3-1/2" clearance between edge of footing and anchor is recommended.

The High Wind anchor is rated to withstand winds of up to 150 mph. They are made from 100% Stainless steel. See chart above for typical recommended footing depth, but the final footing design will be part of your final approved working drawings that you will receive as part of the ordering process. They are normally installed at a 30 to 42 inch with a significant portion of the anchor in concrete underground as shown in the drawings above. For best results, we recommend doing the concrete work at least 3 days ahead of the Structure install so the concrete will cure prior to attaching the Structure to it. You then place the wood posts in the cradle and bolt the wood to the anchor. We supply wood trim pieces to hide the hardware so the bottom of the posts look like they have a wooden boot around them when installation is complete.

Note: If your Structure is placed in a snow area, the concrete must be 6 inches below the frost line.

Frost Line Map across the United States

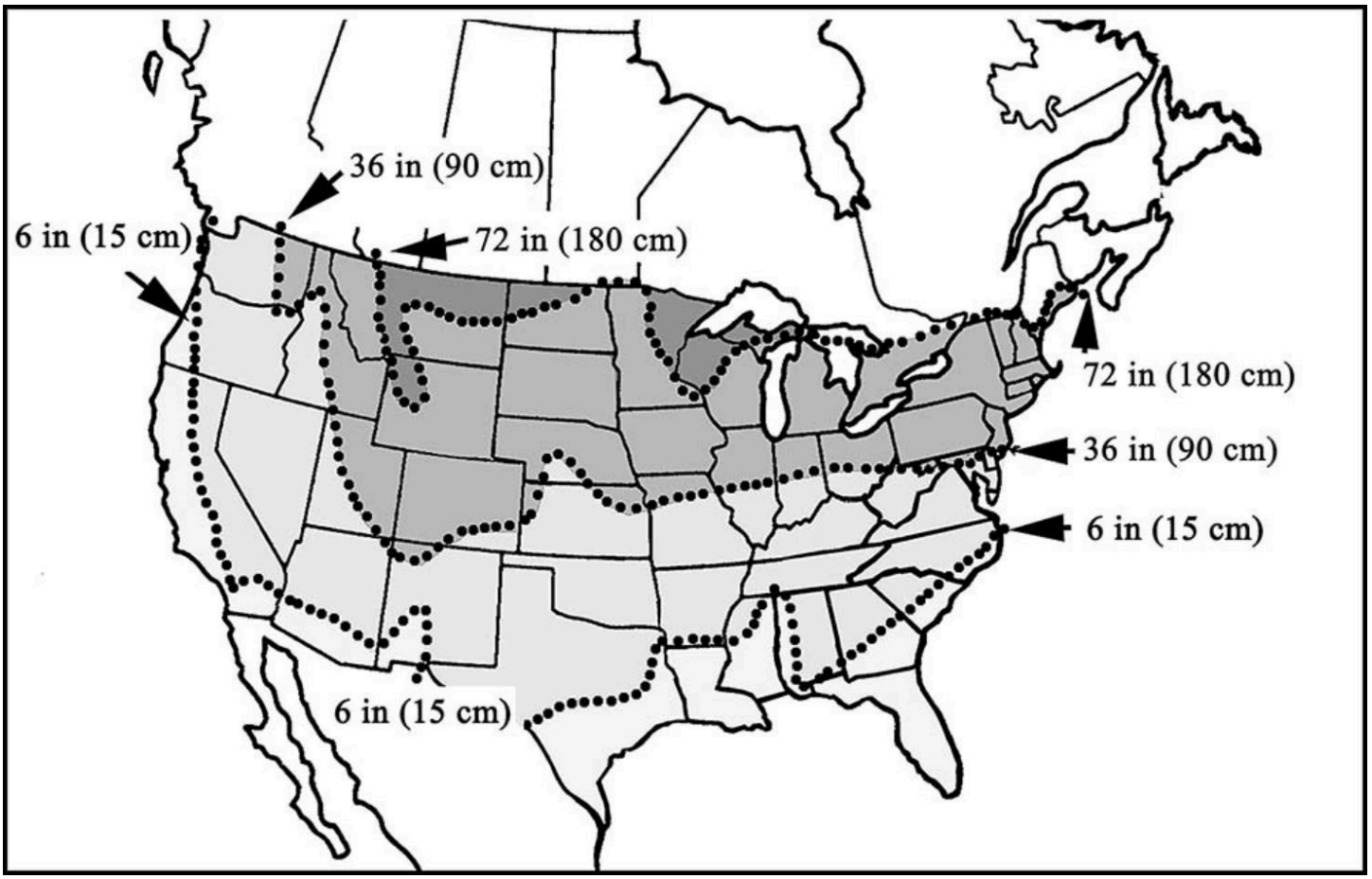

This map is from the National Snow and Ice Data center and shows the frost line map across the United States. Note how it moves down from 72-inches depth to a 6 inch depth.

Stain, Primers & Paints

All our furniture ships finely sanded to 220 grit for a smooth to the touch finish.

Our most popular finish is Transparent Premium Sealant: it leaves your furniture looking natural and helps keep the beautiful wood surface colors from fading for several years. We use Sikkens brand for finishing because they are the best on the market. For more information about how to keep your furniture looking great year after year, please go to Care & Finish

The main difference between paint and stain is that paint sits on top of the surface rather than seeping into the surface. Paint also needs to be painted onto surfaces that have been primed first, while stain does not need a primer.

All our stain finish options let the grain of the wood visible, instead of covering it completely.

Unfinished (fine sanding only): Choose this option if you are applying your own stain or want the surface color to fade to a "weathered look" in a few months.



We do not recommend you leave your furniture unfinished outdoors for any extended period regardless of wood quality. Outdoor weather changes constantly and it is best to at least seal the wood to protect it from consistently absorbing and losing moisture.

Transparent Premium Sealant - Recommended for Outdoors: Visit our Wood Grade page to see pictures of each wood grade finished with our recommended and most popular option.

We also offer the Transparent Premium Sealant with the following stains: There is an additional fee for choosing a stain as it doubles the amount of sealant coats we apply.



Transparent	Cherry Stain	Coffee Stain	Black Stain	White Stain

The photo below shows samples of all our 6 wood grades with Cherry Stain Premium Sealant.



Old-Growth Redwood	Mature Redwood	California Redwwood	Mosaic Redwood	Douglas-Fir	Mosaic Douglas

The photo below shows samples of all our 6 wood grades with Coffee-Stain Premium Sealant.



Old-Growth Redwood	Mature Redwood	California Redwwood	Mosaic Redwood	Douglas-Fir	Mosaic Douglas

How looks our wood with the stain?



Modern Louvered garden Pergola.
Redwood with Coffe Stain



The Cardinal Nest Pavilions, San Francisco
Patio Tables, Ruth Chairs and Desire Sofa’s.
Redwood with Cherry Stain



Trestle Natural Wood Outdoor Table.
Redwood with Black Stain.



Modern Loivered Garden Pergola.
Douglas-Fir with White Stain.

Tiger Stripe Effect: Douglas-Fir when stained dark creates a "tiger stripe" effect as shown in this photo. It is beautiful and most customers love it. If you are looking for a dark consistent stain and do not want to see a “tiger stripe effect,” please go with any of the Redwood grades for a more consistent stain finish.



PRIMERS

We recommend sealing or staining your furniture, and **we do not recommend painting** it. Painting outdoor wood actually lowers its longevity. Eventually the paint seal breaks and the wood gets overly moist from rain. It stays moist because of the paint and multiplies microbial action. Outdoor wood is best sealed and not painted when considering longevity as the most important factor.

Off-White Oil-Based Primer: Choose this option if you are going to paint a **light color.** We apply two coats of primer so that it is ready for one final coat of paint.

Gray Oil-Based Primer: Choose this option if you are painting a **darker color.** We apply two coats of primer so that it is ready for the final coat of paint.

We don't apply finish paint because we honestly are not great painters. If painting, we recommend our extensive 2-coat primer work option. The 2-coat primer will saturate all surfaces so that the final paint goes on with just one coat to save you time and money. If you are painting a light color, choose the off-white primer option. If you are going with a darker final color, choose the gray primer. We recommend you hire a local paint contractor to apply the final coat of your preference after your order is assembled. During the design phase of your order, you can let your assigned designer know the paint you are planning to use and can select the appropriate primer for us to apply.

Assembly & Care

- Assembly Instructions for: Typical Assembly instructions for an average sized Catalina Island Pergola (shown is a 8' x 8' size)
- Assembly Instructions for: How to Anchor Your Pergola

Our White Glove Assembly is a complete onsite assembly and anchoring service. The cost varies between 25 - 35% of your structure's overall cost and includes all materials: footings work, concrete, equipment rental if needed, and standard roofing materials if needed. **Our installation teams are now available in all 50 states!**

DIY: For moderately-sized structures (up to 400 sqft.), some of our customers choose to save money by doing the assembly themselves. In general, the larger the structure, the more people and time you will need: we recommend a minimum of 3 people. If you have assembly questions, just give us a call!

Care: You should expect your furniture to last outside for a minimum of **10-40 years without maintenance,** even in climates with harsh year-round conditions. Because of our high quality

wood, **the silver patina that will naturally occur is surface deep (less than 1/64") and is not indicative of decay.** We keep our display items without refinishing as examples show off their natural aging. We like the patina! If you'd like to keep your set looking its best for decades please visit: Care and Finish.

Materials

Our secret to making furniture and shade structures with unmatched outdoor longevity begins and ends with our wood: we use generous amounts of the most decay resistant wood available.

To keep your Forever Redwood product looking its best, we only use the highest quality stains and sealants.

Our Primary Customer is and always has been the homeowner who appreciates the kind of quality that will last decades.

Our products are regularly purchased by organizations that appreciate longevity: The U.S. Forest Service, U.S. military installations, State and City parks, Golf Clubs and Hotels to name a few.

We offer the option of having your post anchors and hardware made in stainless steel for areas of high humidity or with low ground water conditions.

We are favored by many landscape architects and contractors because they can count on exceptional quality and quick personal service to complete projects.

Before shipping, each item is built by hand and constructed in the shop to ensure that your order is finely finished and carefully inspected. **Old-fashioned hand building allows us to customize each and every item to perfectly fit your needs.**

Because we are a Regenerative Forestry Company and carefully manage our own forests, you have a choice between 6 Wood Grades with extended warranties against decay.

Additional Information



[WOOD GRADE]



[CARE AND FINISH]



[SHIPPING INFORMATION]

Links of Interest

[Raul's Blog]

[Facebook]

[Instagram]

[Twitter - X]

[Sketchfab]

[Vimeo]

[Youtube]

[Pinterest]

FOREVER REDWOOD
FROM THE FOREST, FOR THE FOREST SINCE 1995

Raul Hernandez
Founder & CEO
(707) 495 4955 - Office
raul@foreverredwood.com

(866) 332-2403 | www.ForeverRedwood.com | 1060 Salmon Creek Rd, Bodega, CA 94922
3D Models | Facebook | sketchfab | 4.8 / 5 - 13,000+ Customers | 5000+ Shade Structures | 20,000+ Furniture Pieces