FOREVER REDWOOD

DIMENSIONS & DRAWINGS

Angel's Trellis Swing

When we receive any Pergola order, we will provide you with a detailed set of drawings based on the options and sizes chosen. The drawings will clearly show all the details and dimensions from 3 different angles. They are an excellent tool for you to double check everything to be sure it is exactly as you'd like before it is built. Drawings are emailed within 5 business days and we'll revise your drawings as needed to make sure all details and sizing issues are perfected prior to beginning construction.

Top View	2
Rafter View (Pergola Width)	3
Support View (Pergola Length)	4
Isometric View	5
Drawing 5	6

foreverredwood.com · (866) 332-2403



ISOMETRIC VIEW

TOP VIEW

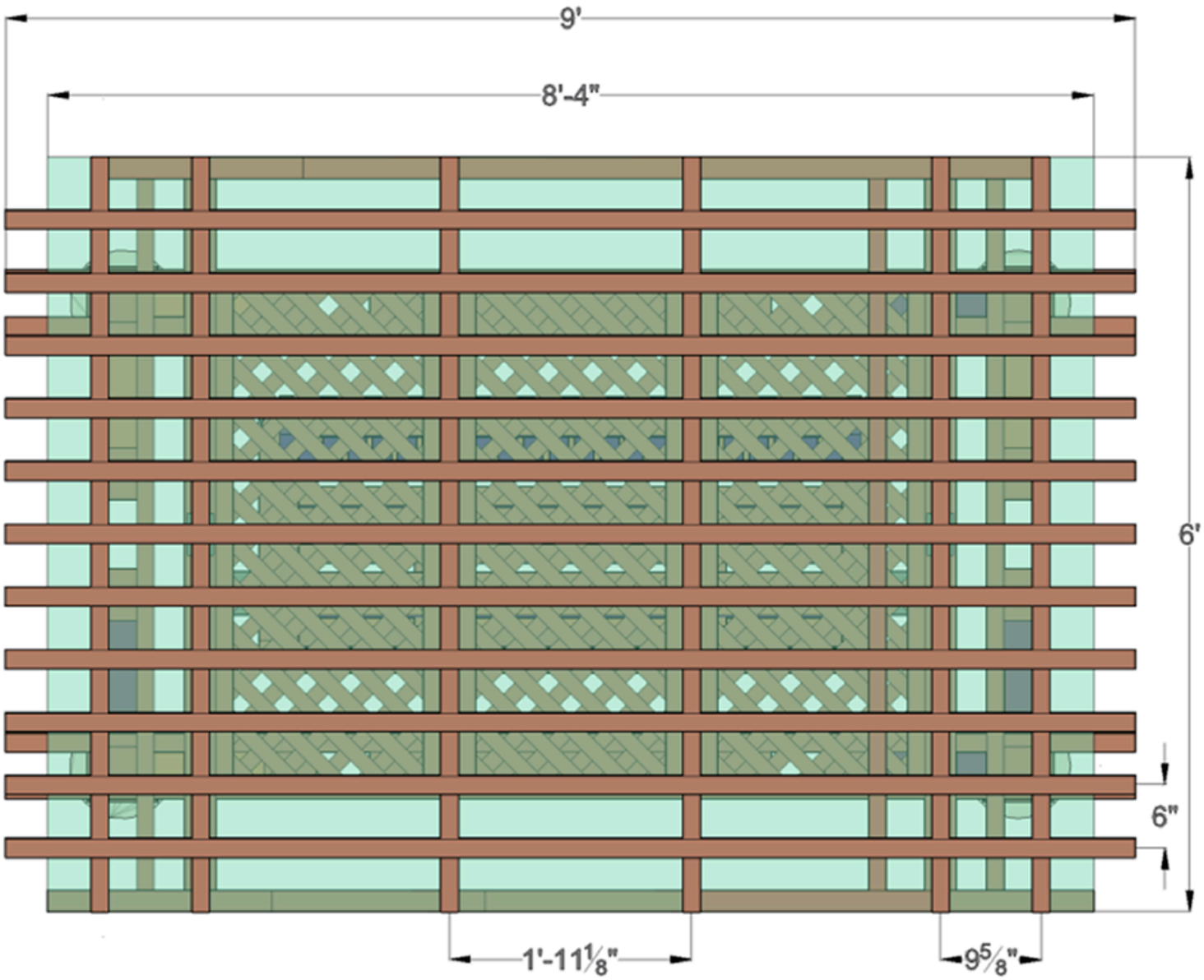

RAFTER VIEW (PERGOLA WIDTH)

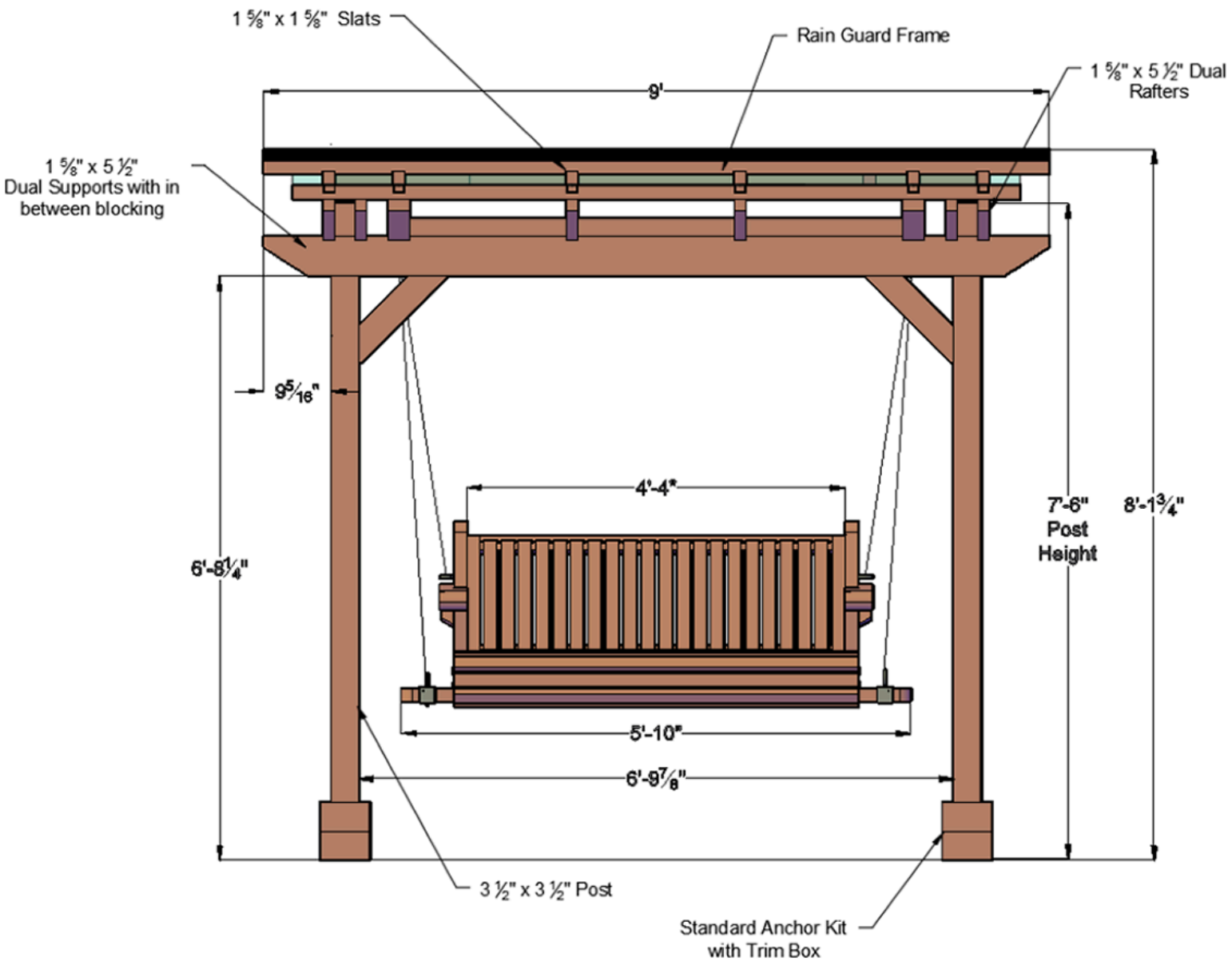

SUPPORT VIEW (PERGOLA LENGTH)

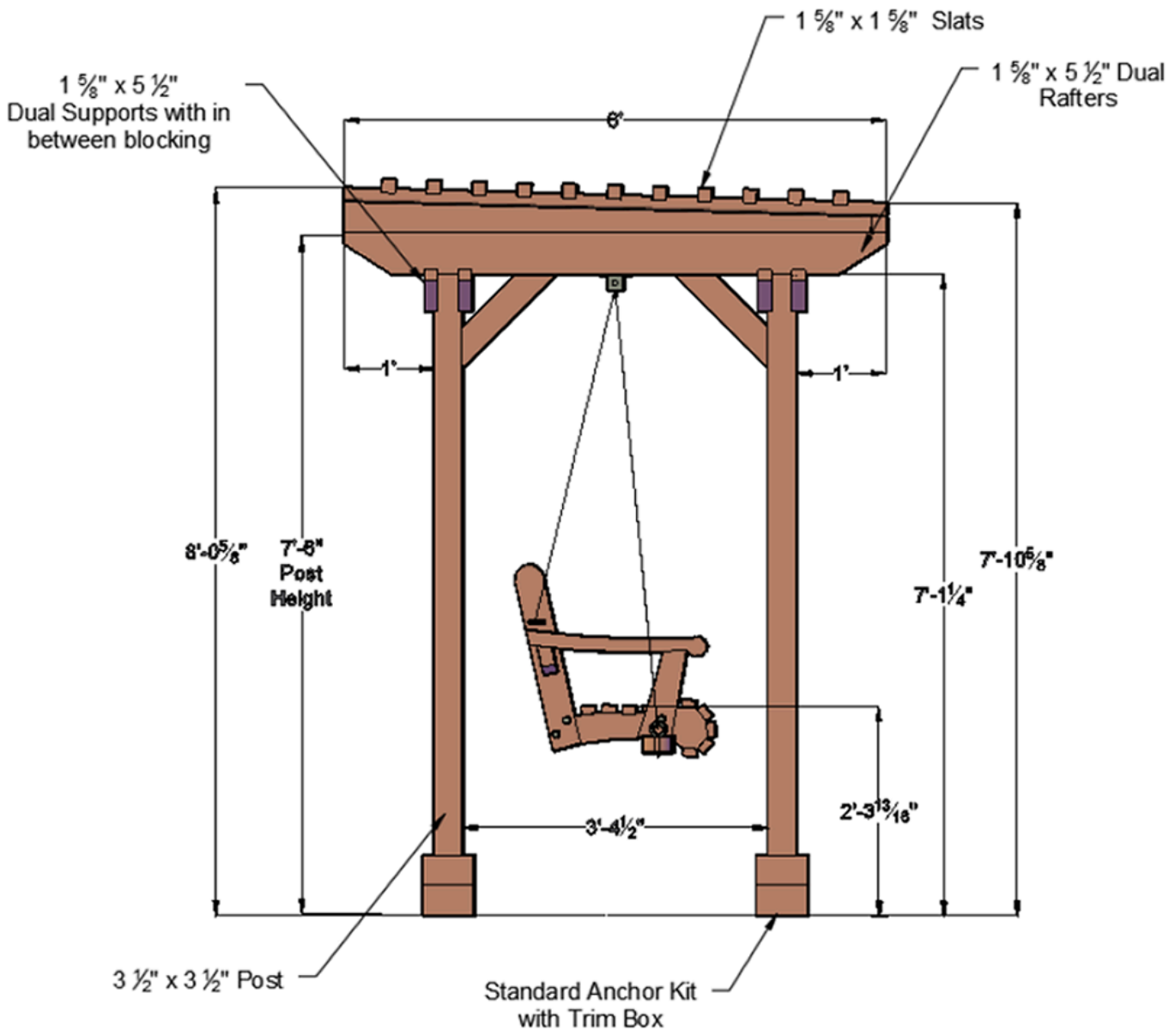

ISOMETRIC VIEW



DRAWING 5

Corner posts are 5 1/2" by 5 1/2" (standard sized 4x4s) and are recessed 12" in from roof dimensions (This can be adjusted to meet your needs just let us know).

Roof support timbers (lintels) and rafters are 1 7/8" x 5 3/4". If you prefer a different sizing or style write what you would like in the comments section or contact us.

Posts normally ship 9' long. 9 posts make the top of the roof 9' also and give you an 8' 4" clearance ("ceiling height") under the rafters. About 90% of our pergola customers go with the default 9' post height. If you'd like your pergola taller or shorter, just select Other Height and write in what you would like in the comments section.

Forever Redwood Pergola kits are completely assembled in the shop prior to shipping to be certain everything fits together perfectly. All timbers are notched into one another to increase structural strength and to lock all your pergolas timbers in place so they will never sag, twist or move. There are hundreds of notches in the larger pergolas. Full notching is rarely practiced because it is labor intensive, but it is one of the secrets to a long lasting beautiful pergola.

All assembly hardware is included and is stainless steel.

For additional long-term structural strength, we add solid timber blocking in-between the dual support timbers as shown in the drawing below. With this blocking, the dual supports are in effect converted into one solid 5 3/4 inch x 61/2 inch or 7 1/4 inch x 6 1/2 inch timber as shown below:

