FOREVER REDWOOD

DIMENSIONS & DRAWINGS

Del Norte Outdoor Kitchen Pavilion

The Del Norte Outdoor kitchen Pavilion is available with a length of 10' to 40' and a width of 8' to 24'. These dimensions reflect the overall roof measurements. A standard roof overhang is 12".

Side View	2
Front View	3
Isometric View	4
Drawing 4	5

foreverredwood.com · (866) 332-2403

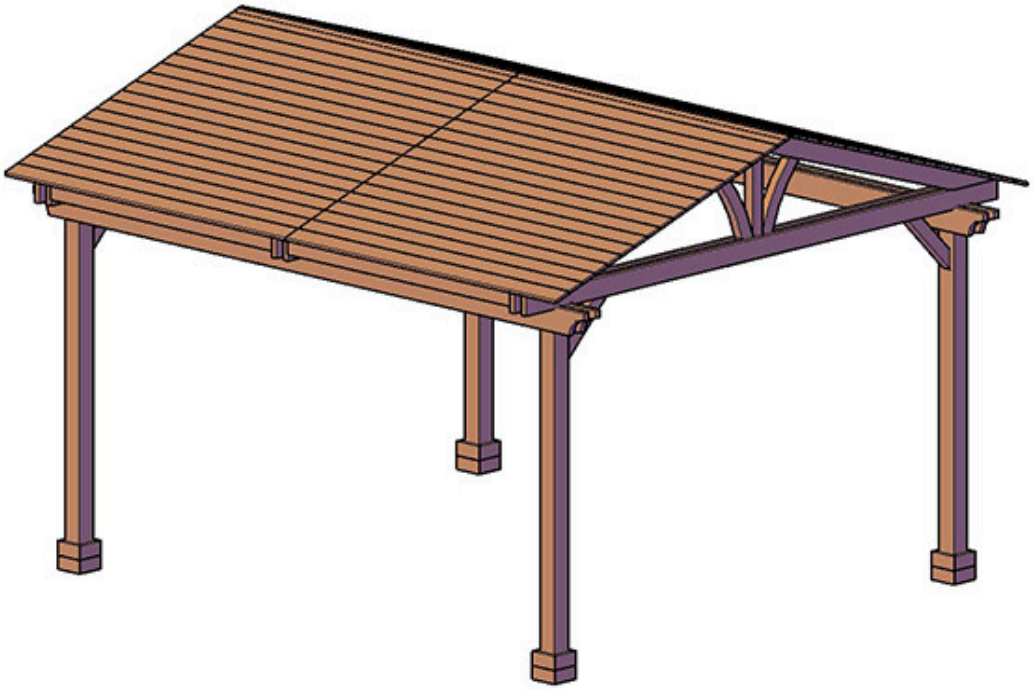

ISOMETRIC VIEW

SIDE VIEW

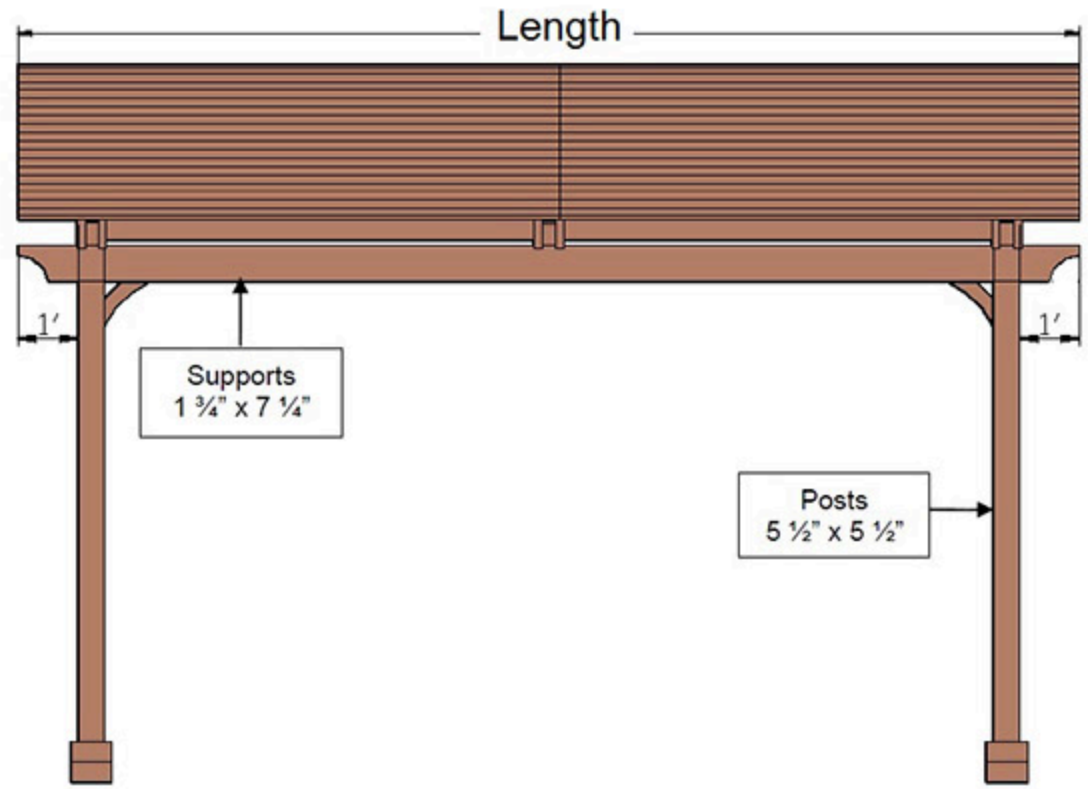

FRONT VIEW

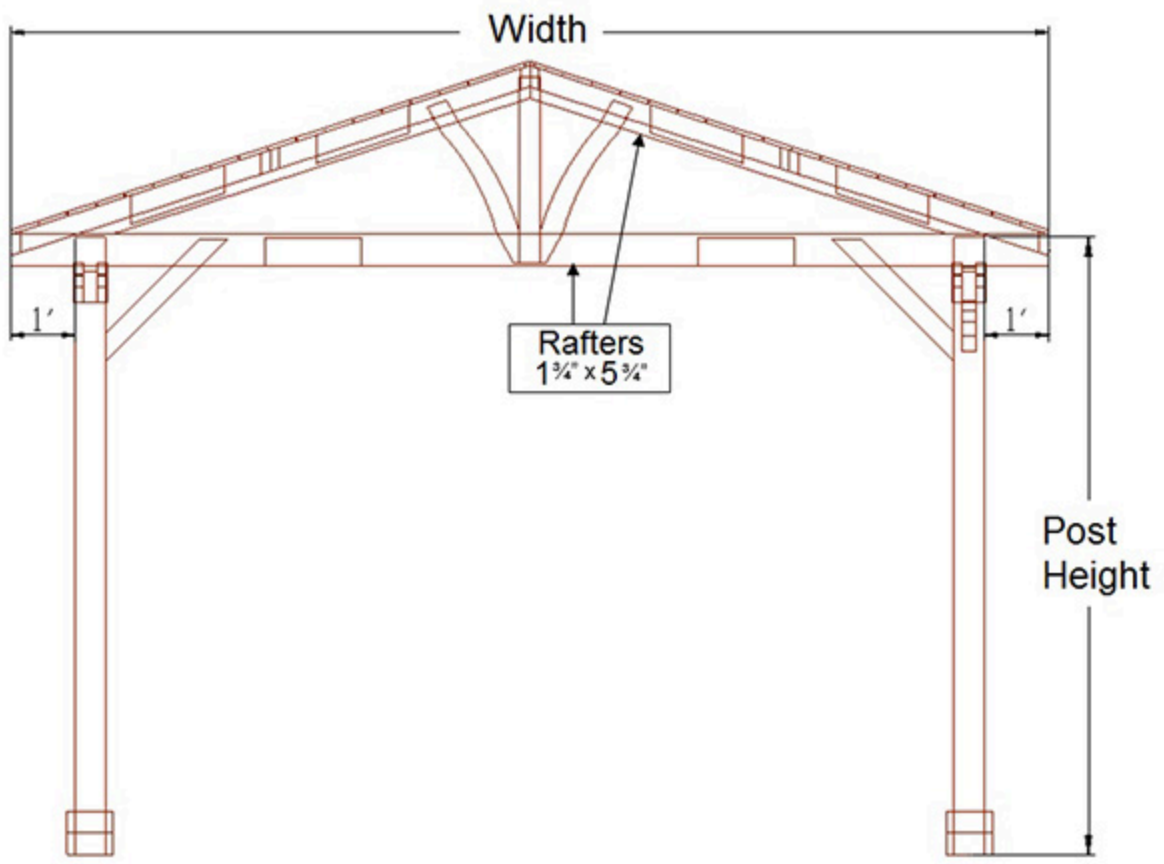

ISOMETRIC VIEW

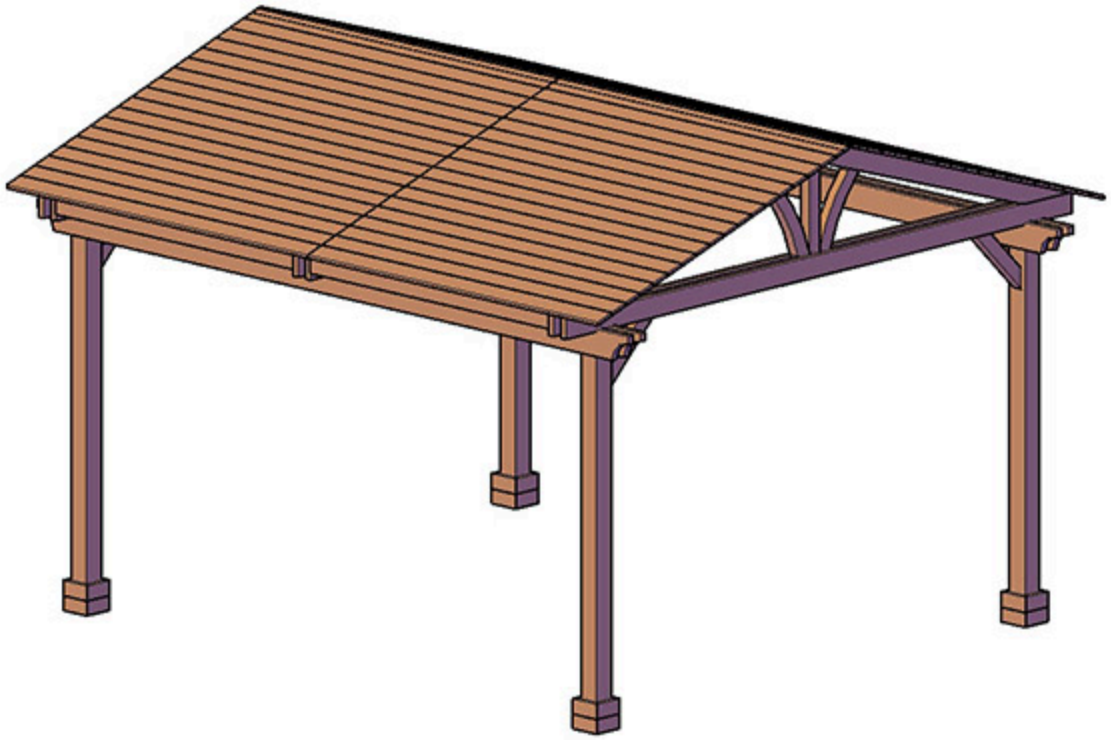

DRAWING 4

For additional long-term structural strength, we add solid timber blocking in-between the dual support timbers as shown in the drawing below. With this blocking, the dual supports are effectually converted into one solid 7 1/4" x 6 1/2" timber as shown below:

