FOREVER REDWOOD

DIMENSIONS & DRAWINGS

Del Rio Cathedral Ceiling Thick Timber Pavilion

The Del Rio Cathedral Ceiling Thick Timber Pavilion is available in lengths from 10' to 40' and widths from 10' to 24'. The length and width are the overall roof measurements. The standard roof overhang is 12".

Drawing 1	2
Drawing 2	3
Drawing 3	4
Drawing 4	5
Drawing 5	6
Drawing 6	7

foreverredwood.com · (866) 332-2403

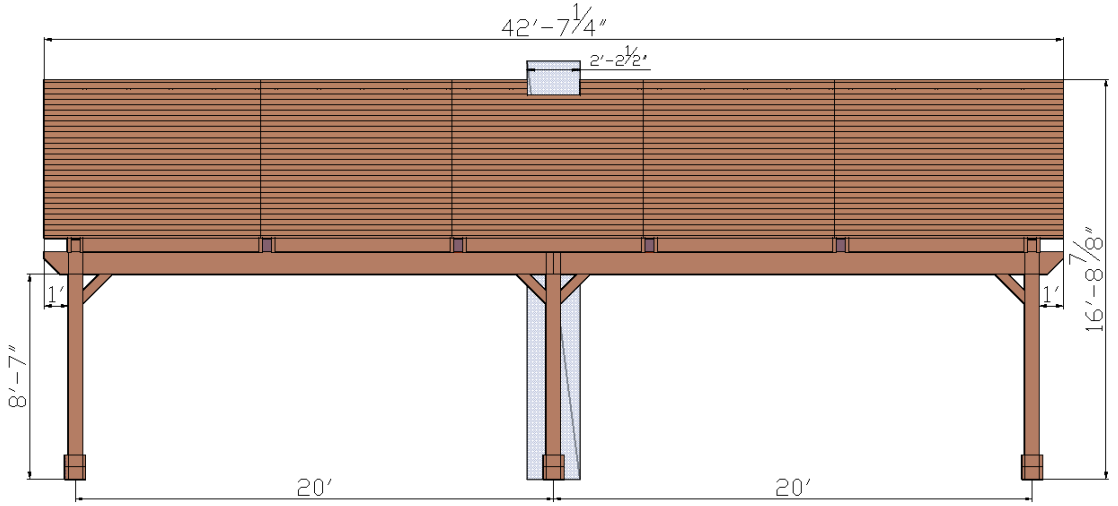

DRAWING 1

DRAWING 1

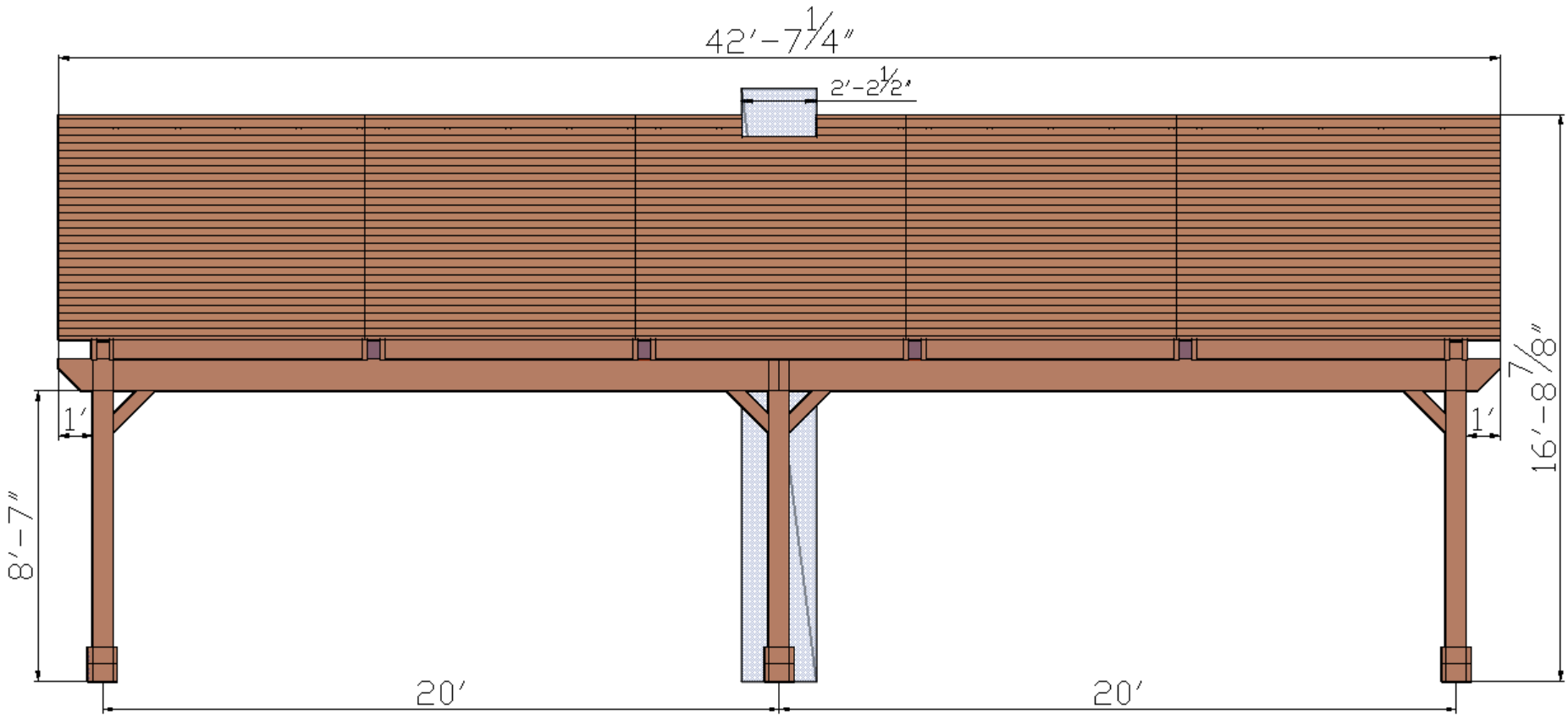

DRAWING 2

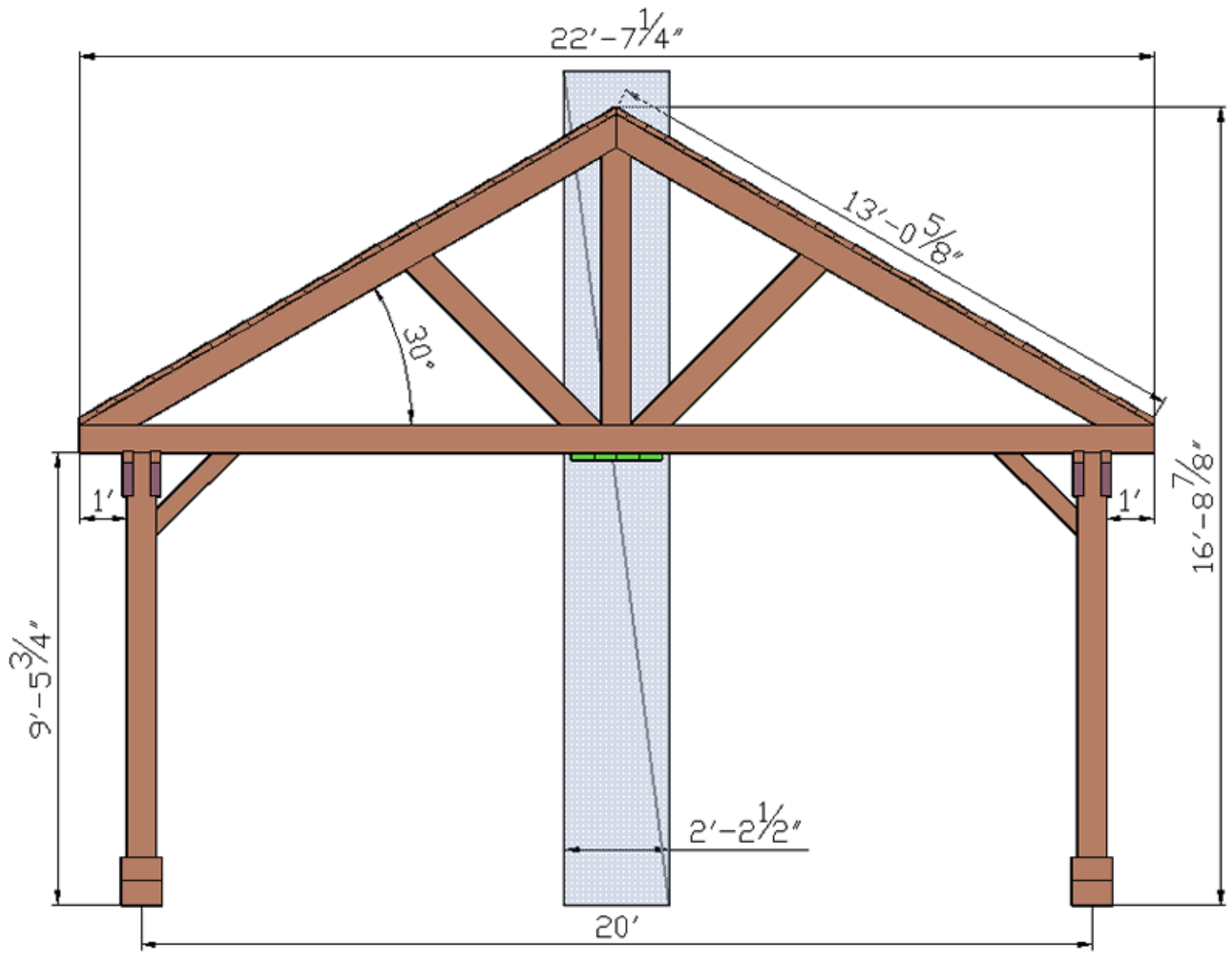

DRAWING 3

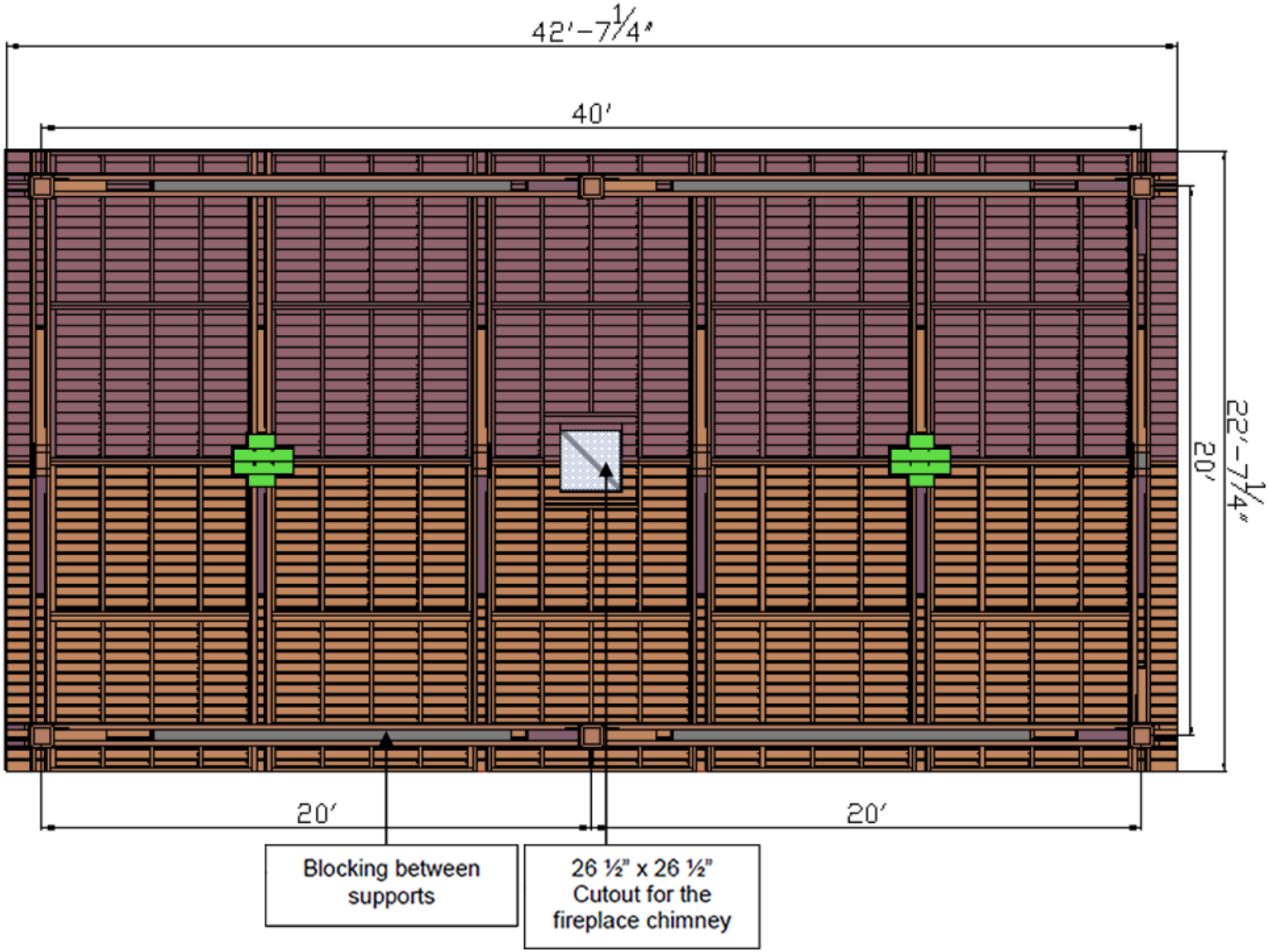
42′–7¼″
40′
22′–7¼″
20′
20′
20′
Blocking between supports
26 ½" x 26 ½" Cutout for the fireplace chimney

DRAWING 4

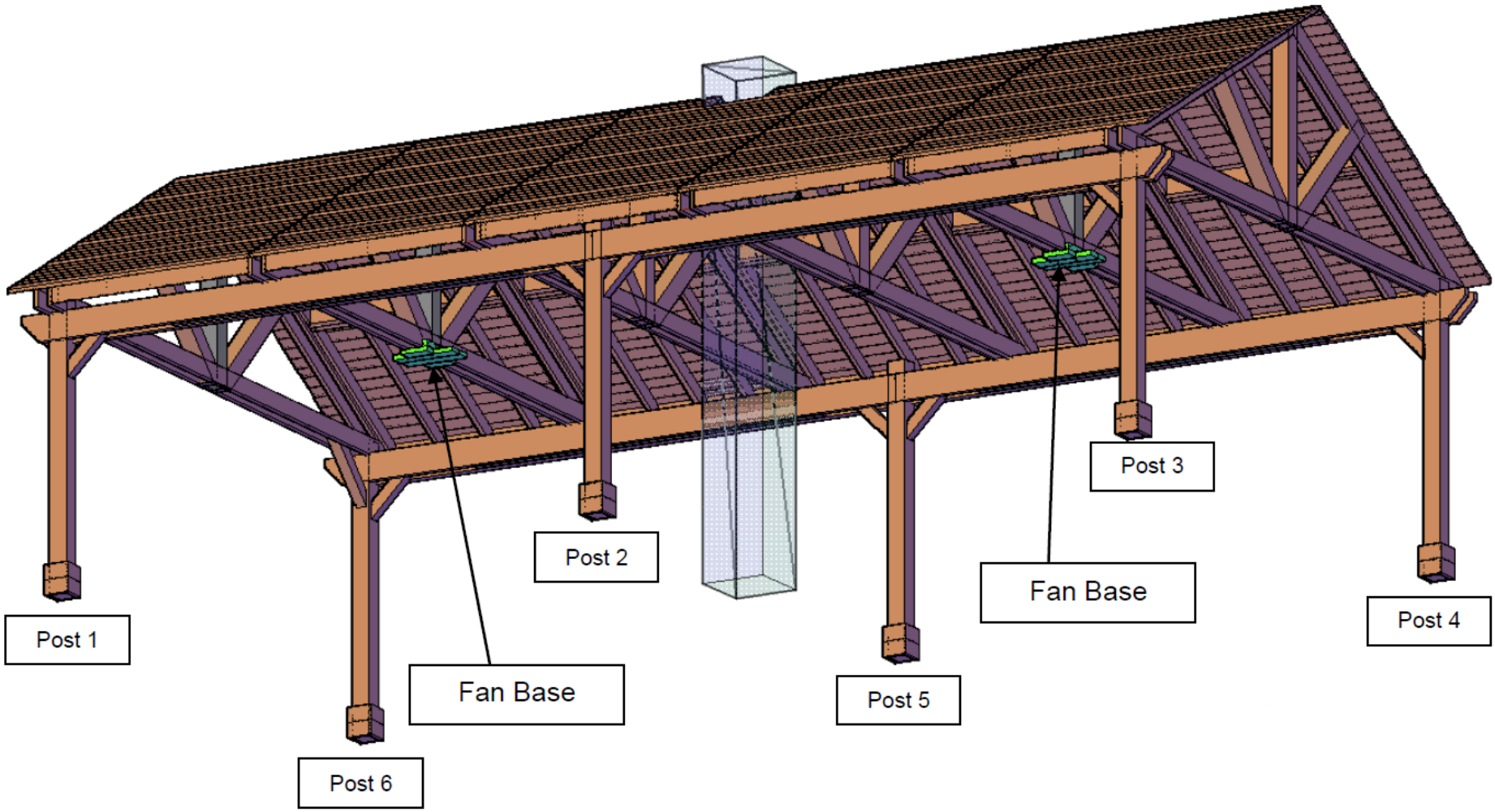

DRAWING 5

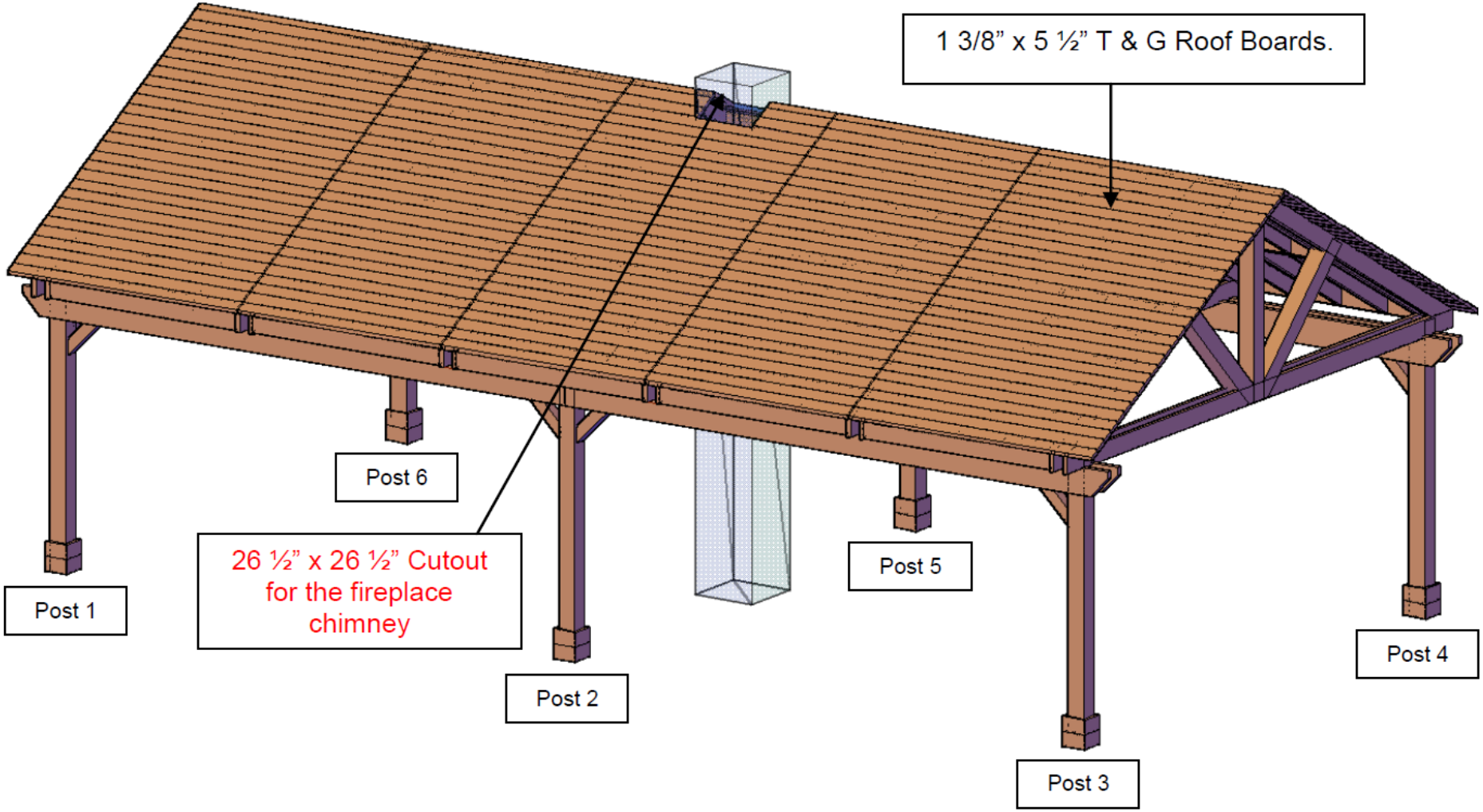
1 3/8” x 5 ½” T & G Roof Boards.
Post 6
26 ½” x 26 ½” Cutout for the fireplace chimney
Post 1
Post 2
Post 5
Post 4
Post 3

DRAWING 6

For additional long-term structural strength, we add solid timber blocking in-between the dual support timbers as shown in the drawing below. With this blocking, the dual supports are in effect converted into one solid 7 1/4" x 6 1/2" timber as shown below:

