FOREVER REDWOOD

DIMENSIONS & DRAWINGS

El Paso Wedding Pavilion

The El Paso Wedding Pavilion are available in lengths from 20' to 60' and widths from 22' to 45'. The length and width are the overall roof measurements. The standard roof overhang is 12".

Front View	2
Side View	3
Isometric View	4
Front View	5
Side View	6
Isometric View	7
Front View	8
Side View	9
Isometric View	10
Drawing 10	11

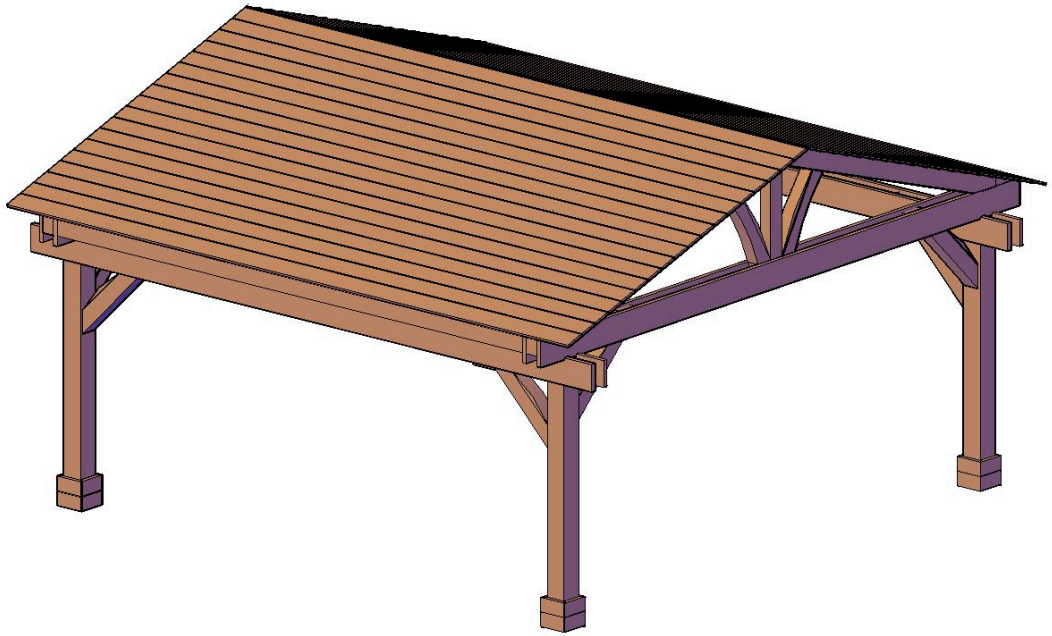

ISOMETRIC VIEW

FRONT VIEW

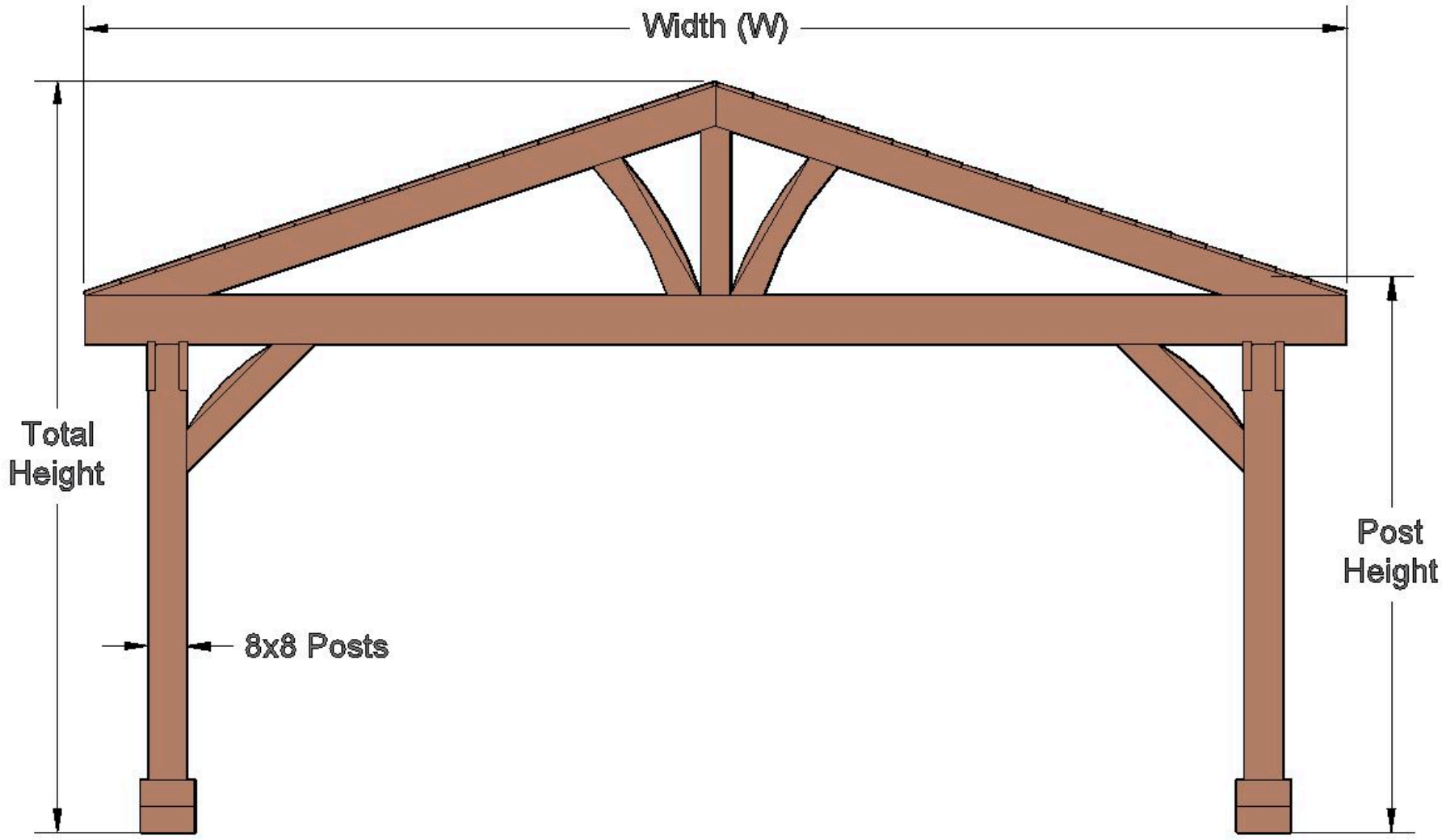

SIDE VIEW

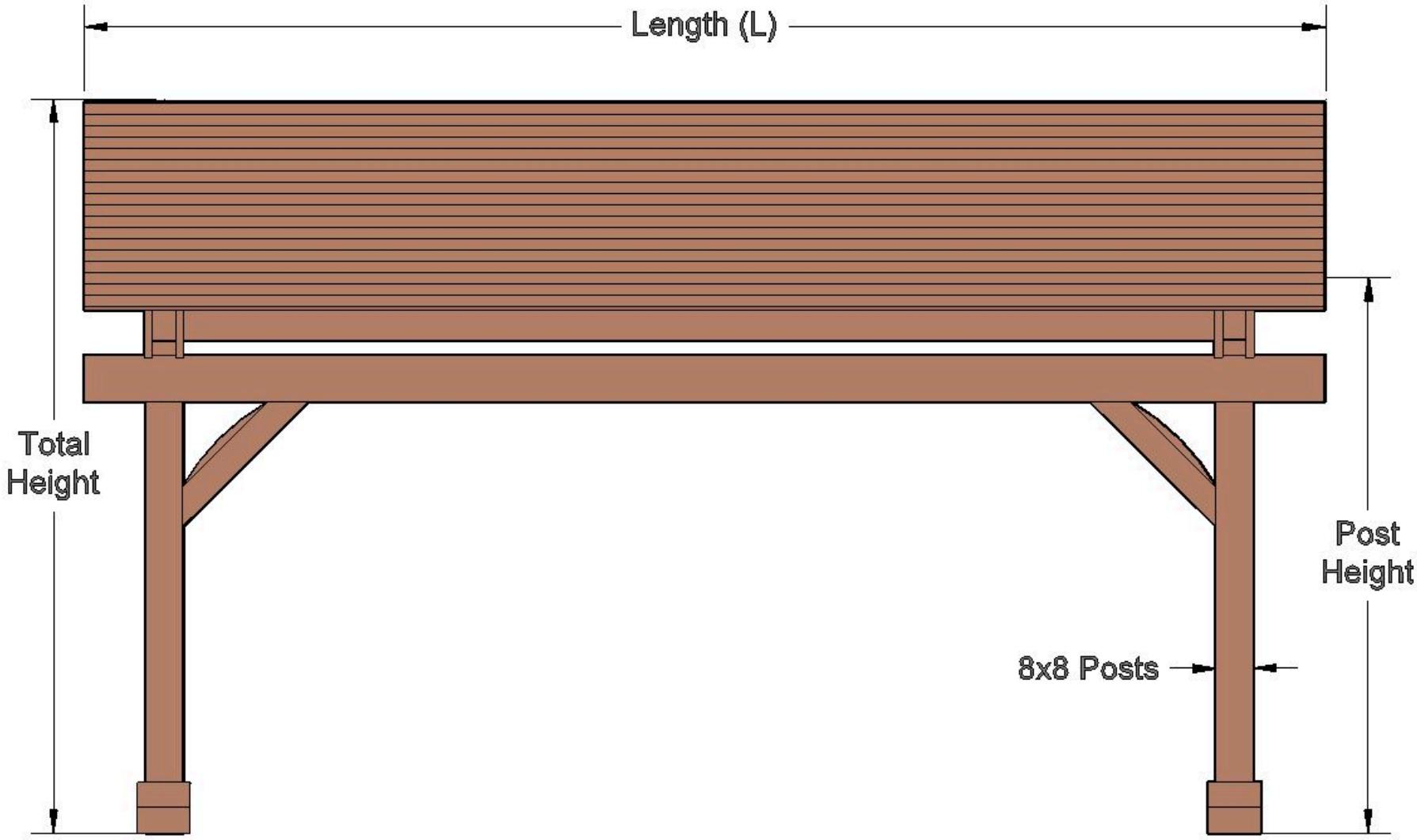

ISOMETRIC VIEW

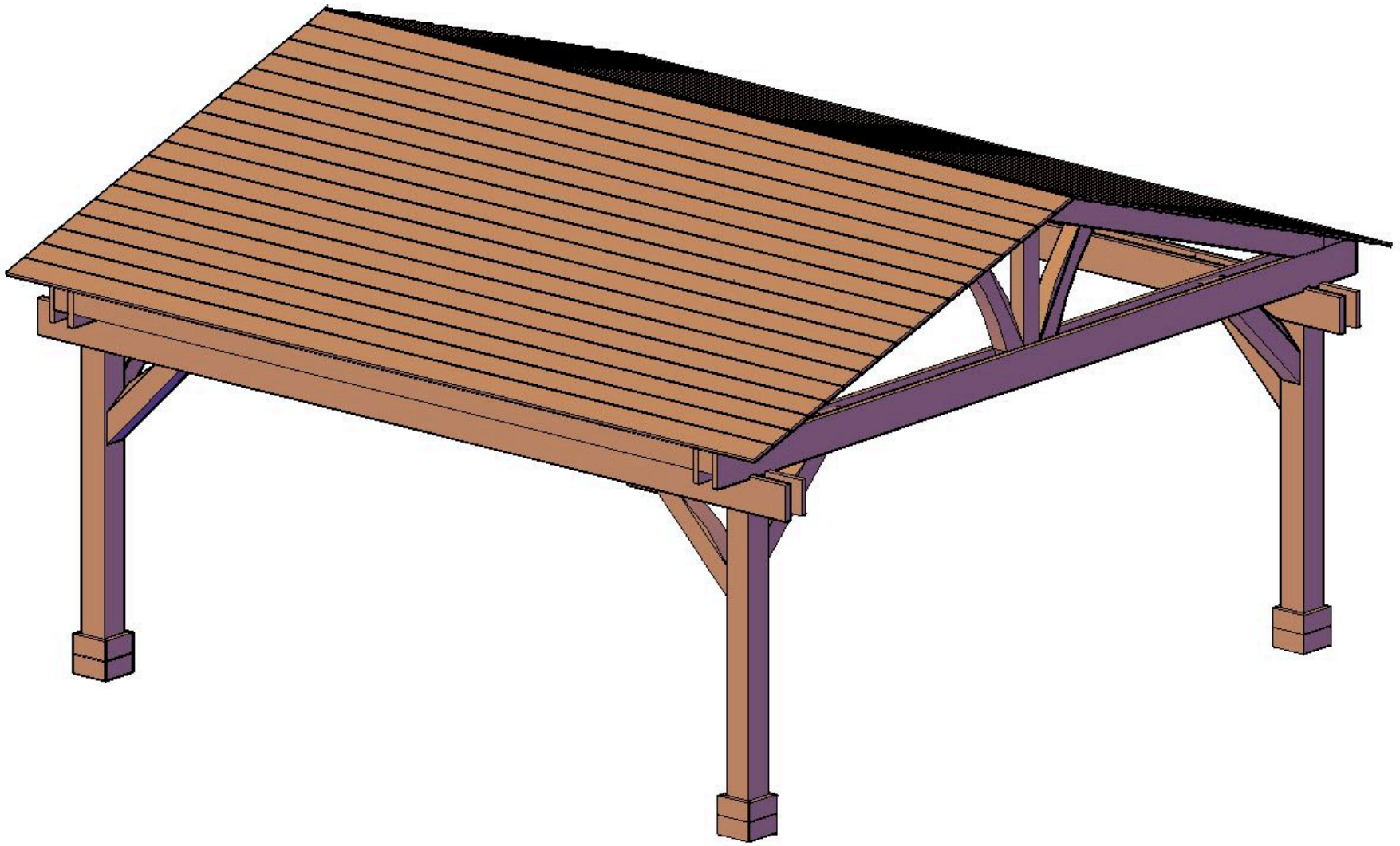

FRONT VIEW

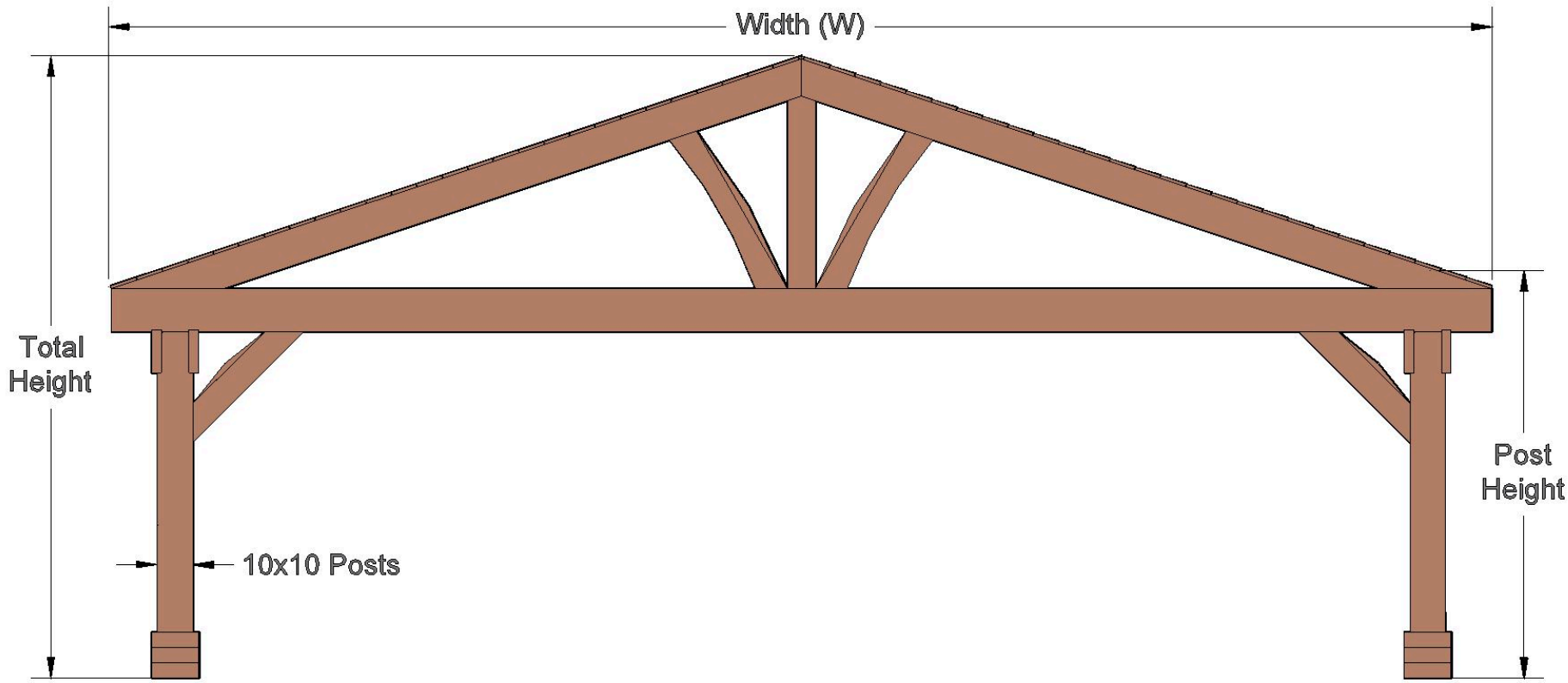

SIDE VIEW

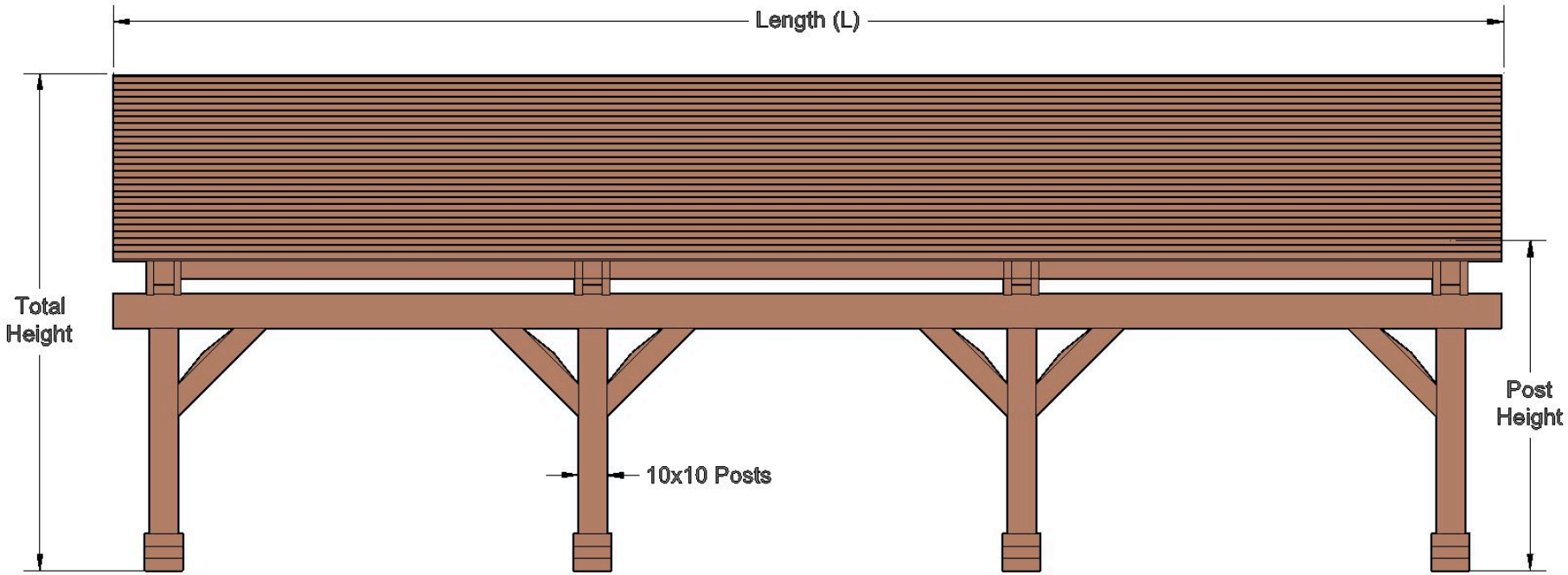

ISOMETRIC VIEW

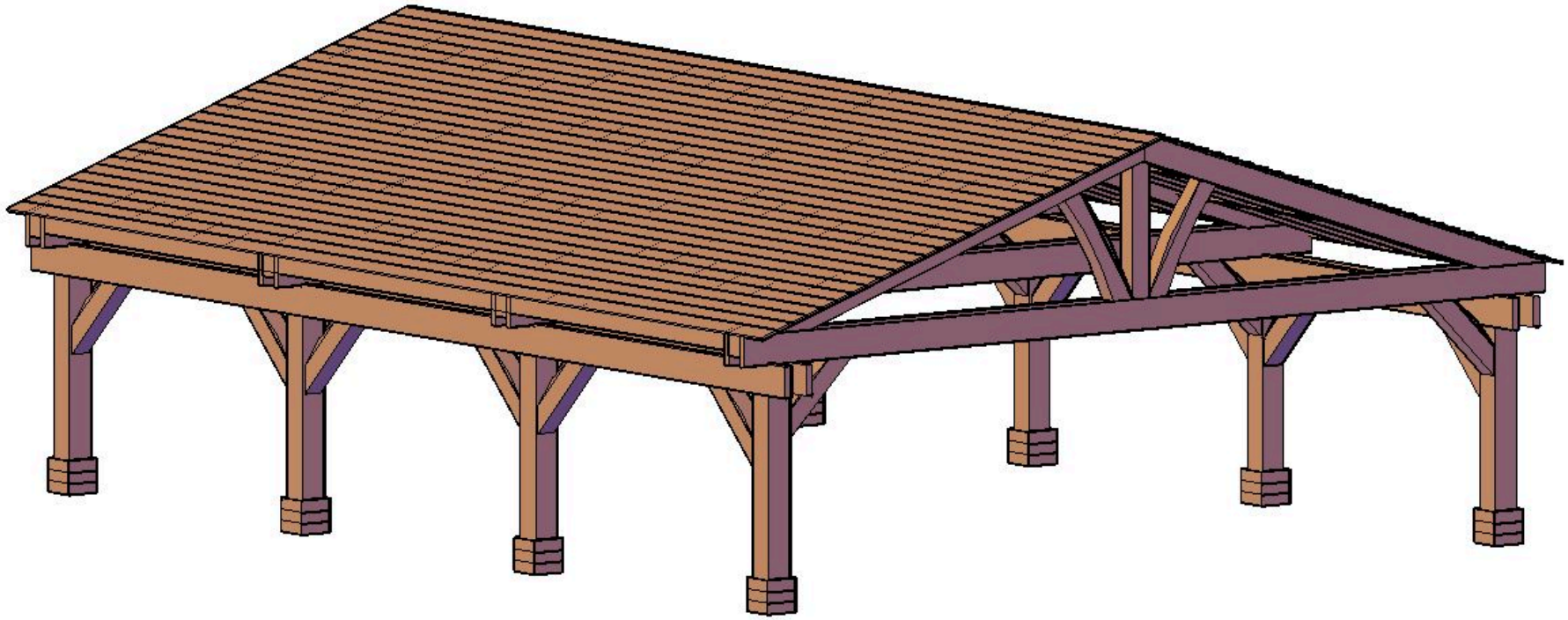

FRONT VIEW

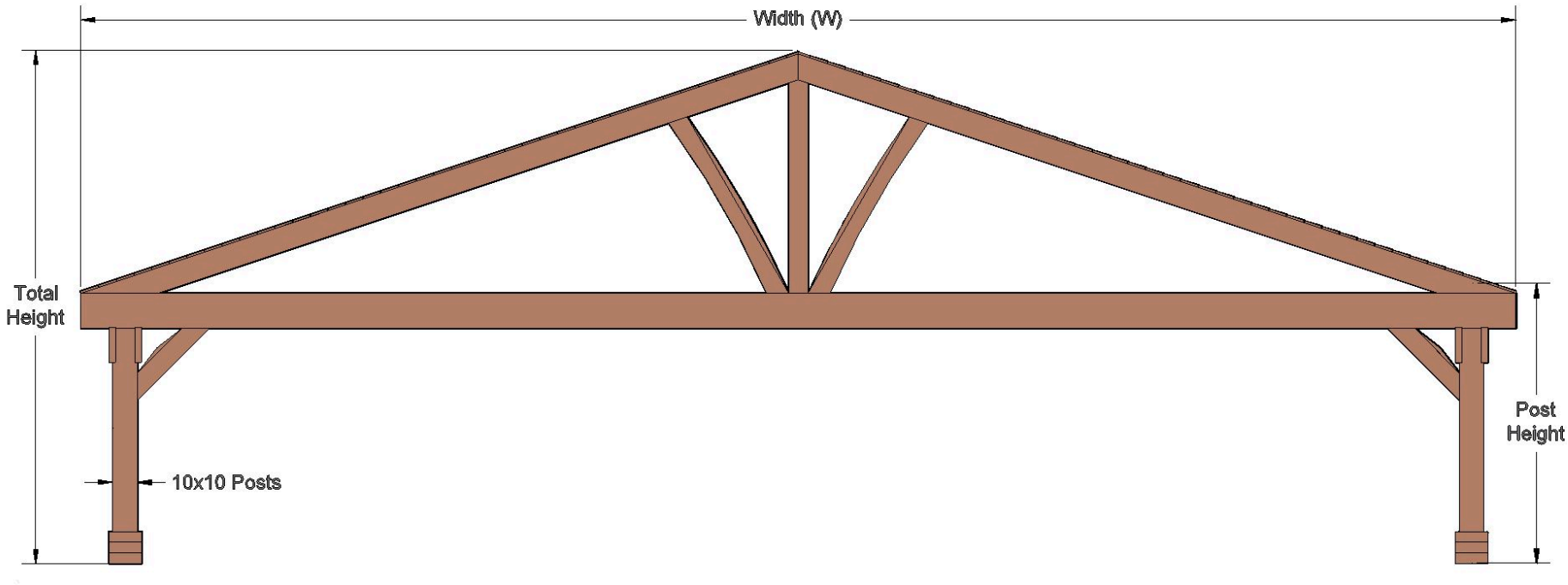

SIDE VIEW

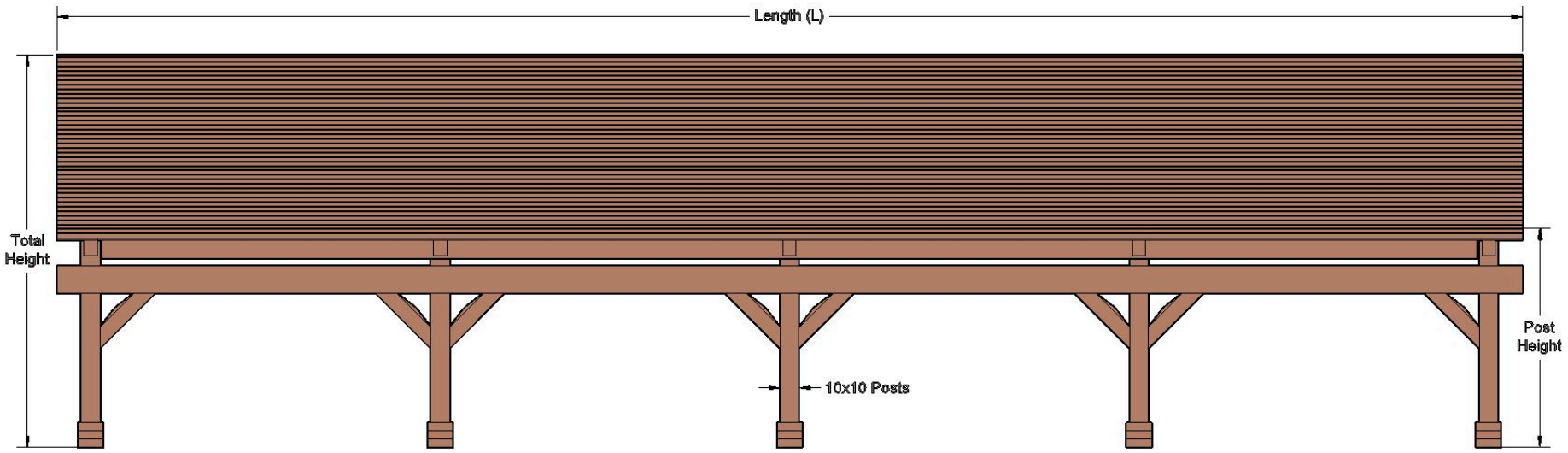

ISOMETRIC VIEW

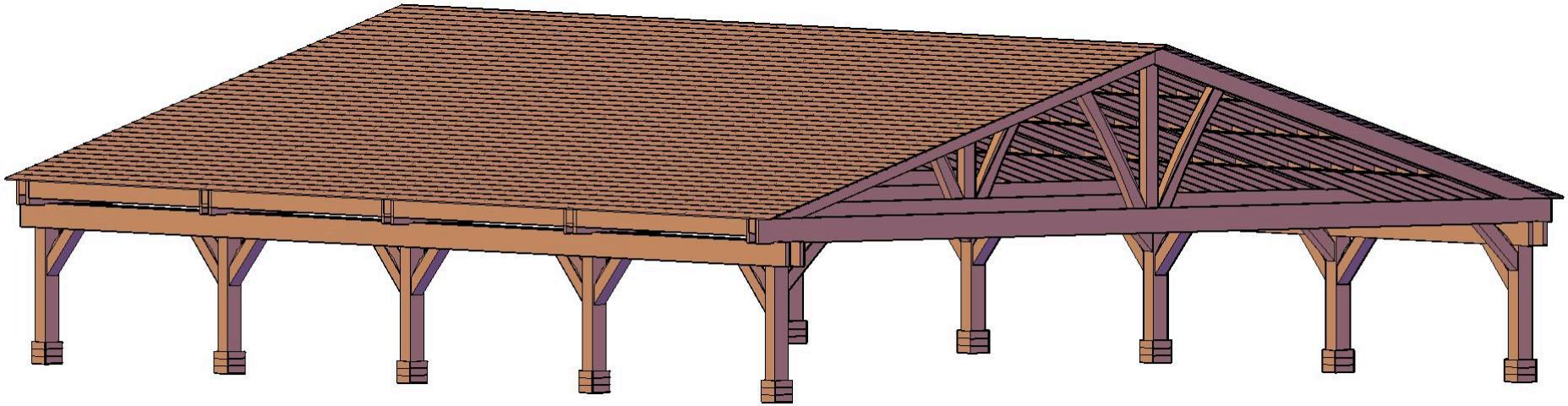

DRAWING 10

For additional long-term structural strength, we add solid timber blocking in-between the dual support timbers as shown in the drawing below. With this blocking, the dual supports are in effect converted into one solid 7 1/4 inch x 6 1/2 inch timber as shown below:

