FOREVER REDWOOD

DIMENSIONS & DRAWINGS

Eli's Redwood Potting Bench

The Eli's Potting Bench is available in 3 standard sizes: 42" W, 48" W and 60"W. In all sizes, the standard depth is 21" deep and the height is 65 ½" if ordered with 2 shelves and 55" if ordered with one shelf.

The work area is a butcherblock construction tabletop.

Standard features: 2 large drawers under the tabletop, each measuring 15 ½" W x 18 ½" D x 5 ¾ H.

Shelving: All Eli's Potting bench shelves are extra strong and are built with 1 7/8" thick boards to hold up fine under the heaviest loads.

There is one large shelf underneath the tabletop work area that is 21" deep and runs the entire width of the potting bench. It is usually set at 4 5/8" H off the ground without casters and 10 ½" H if you choose to add casters to your Potting Bench.

You also have the option of either one or two shelves above the tabletop work area. If you choose 2 shelves, the two top shelves are set at 50 ½" and 61 ½"H and are 10"D and you have 12 ¼" of clearance between the tabletop and the

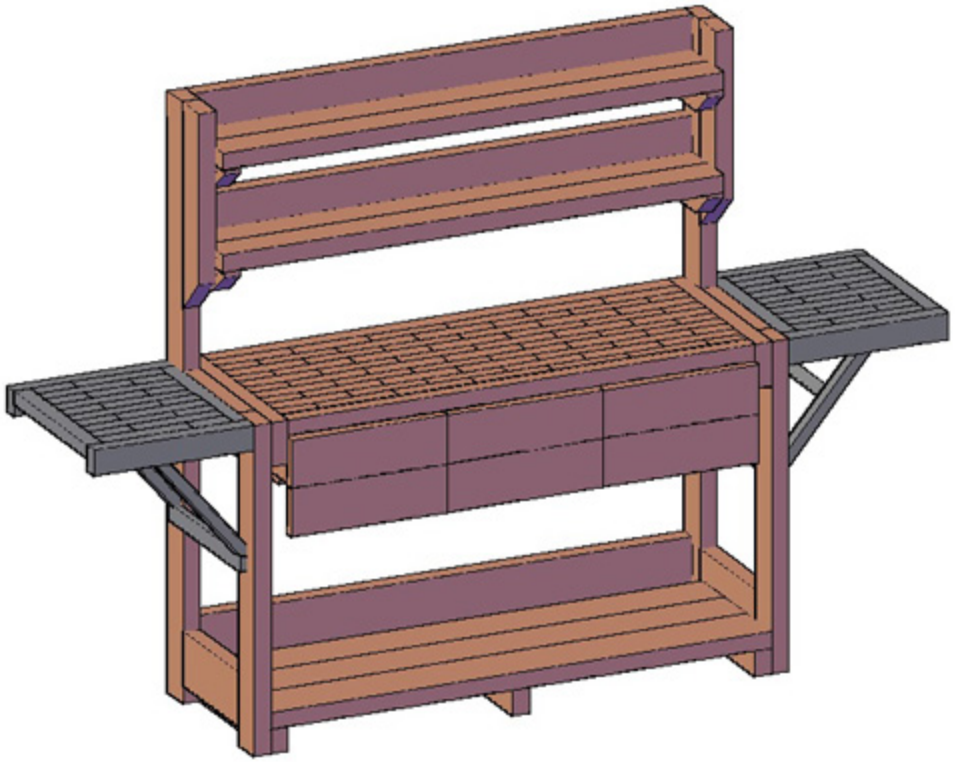

ISOMETRIC VIEW

ELI'S POTTING BENCH STD SIZE WITH 1 SHELF.

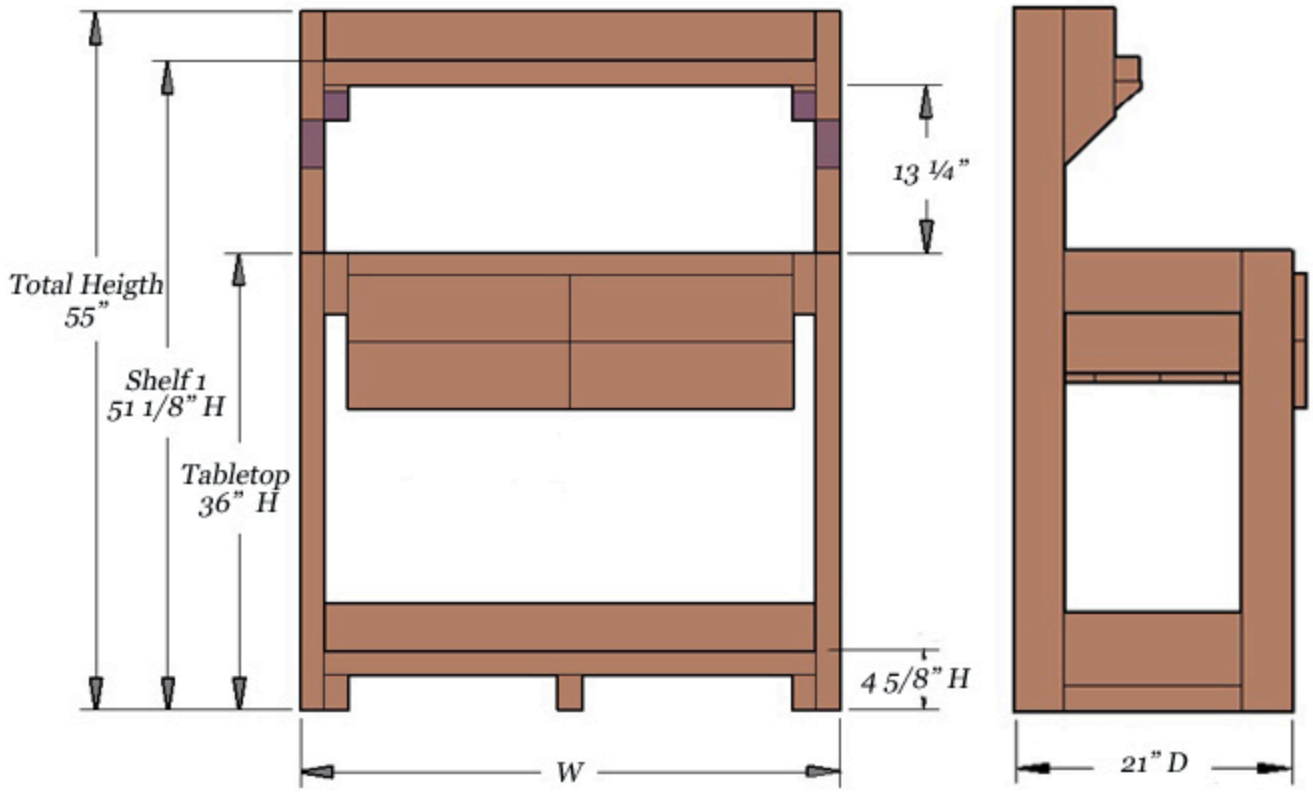

ELI'S POTTING BENCH STD SIZE WITH 2 SHELVES AND CASTERS.

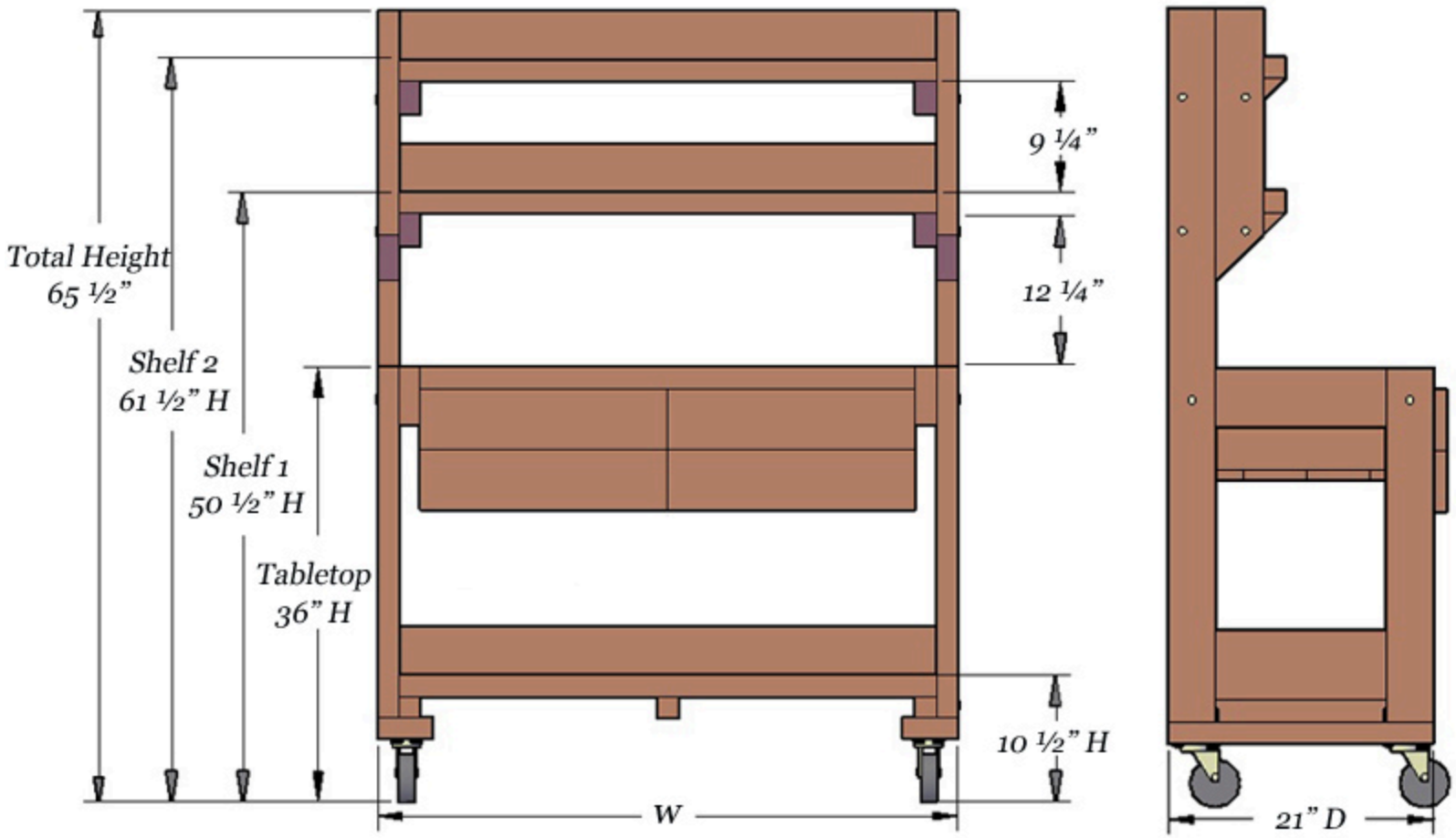

ELI'S POTTING BENCH XXL SIZE WITH 3 DRAWERS, TWO SHELVS AND TWO FOLD DOWN SIDES.

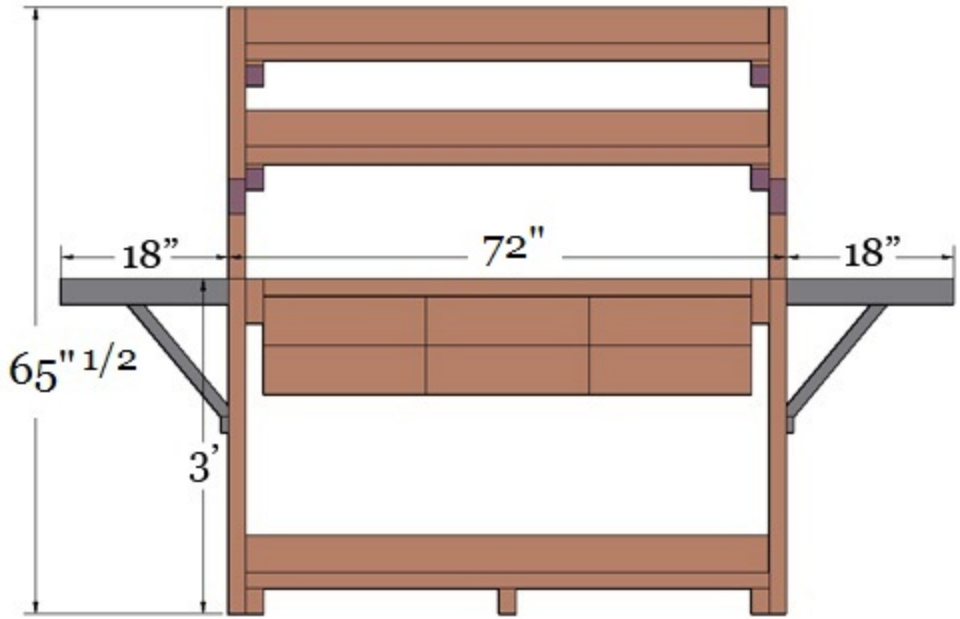

ISOMETRIC VIEW

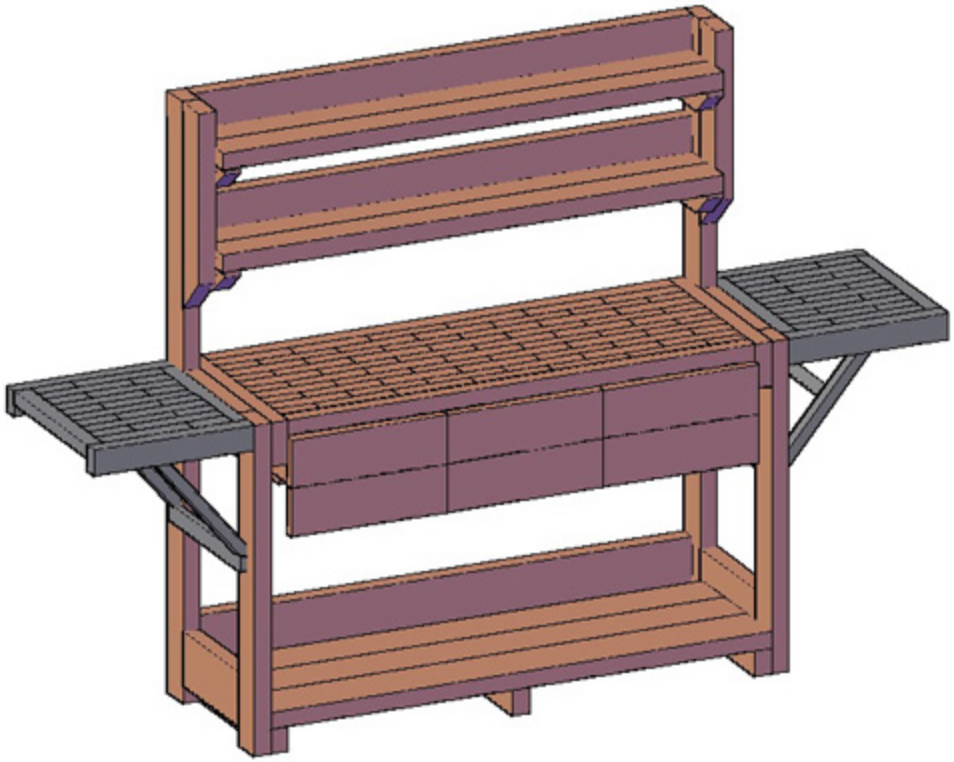

MEASUREMENTS

Eli's Potting Bench Dimensions			
Size	**Potting Bench Width(Without fold down sides)**	**Potting Bench Width(With fold down sides up)**	**Drawers Qty**
Standard	42"	78"	Until 2 Drawers
Large	48"	84"	Until 2 Drawers
Extra Large	60"	96"	Until 2 Drawers
XX Large	72"	108"	Until 3 Drawers