FOREVER REDWOOD

DIMENSIONS & DRAWINGS

Kikue's Pavilion

The Kikue's Pavilion are available in lengths from 12' to 40' and widths from 12' to 20'

Drawing 1 2
Drawing 2 3
Drawing 3 4
Drawing 4 5

foreverredwood.com · (866) 332-2403

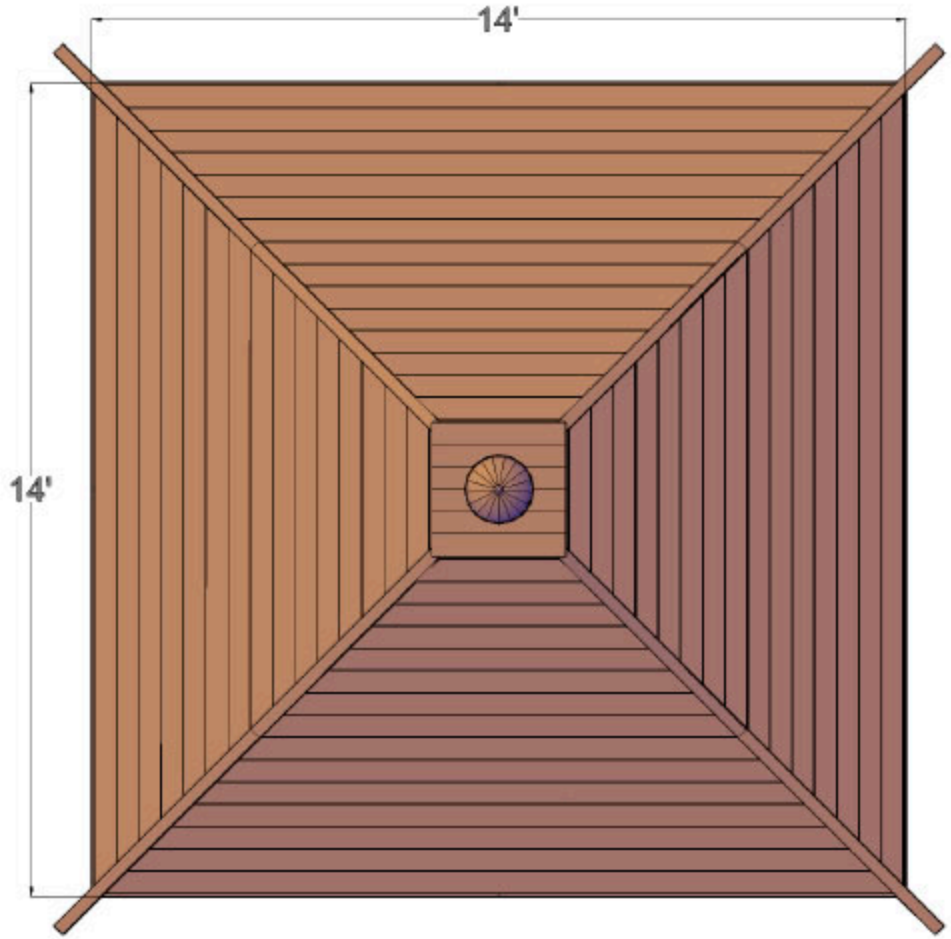

DRAWING 1

DRAWING 1

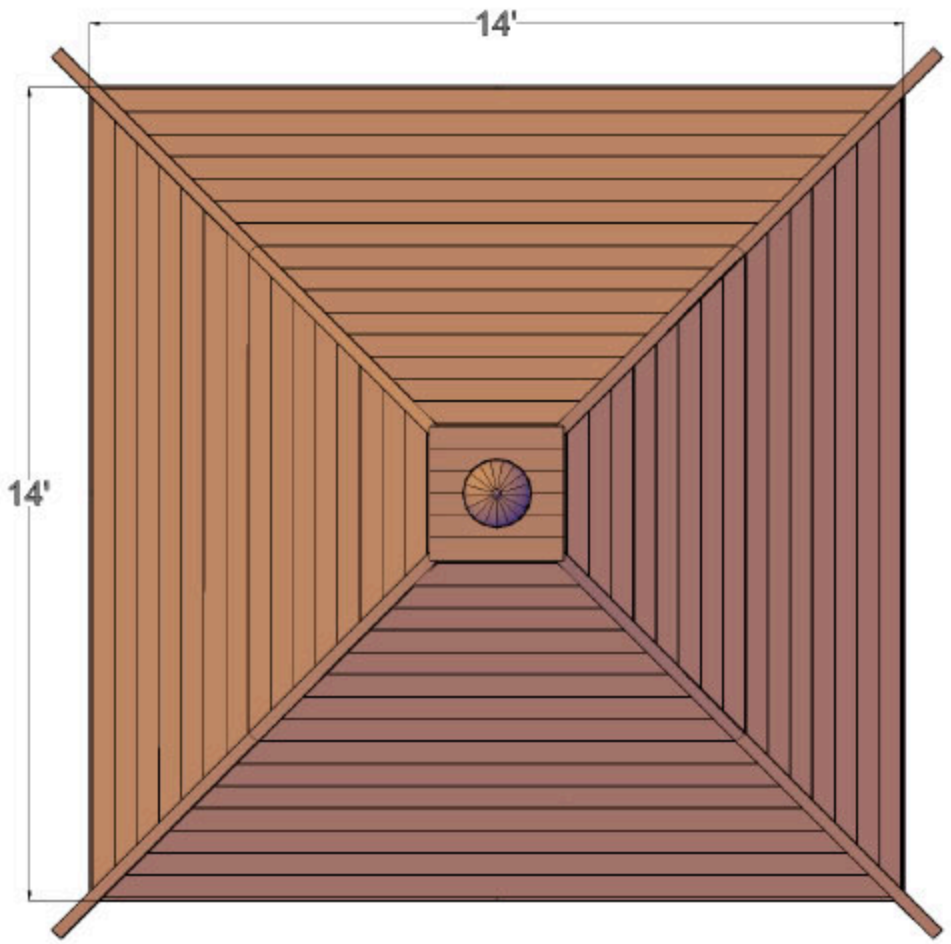

DRAWING 2

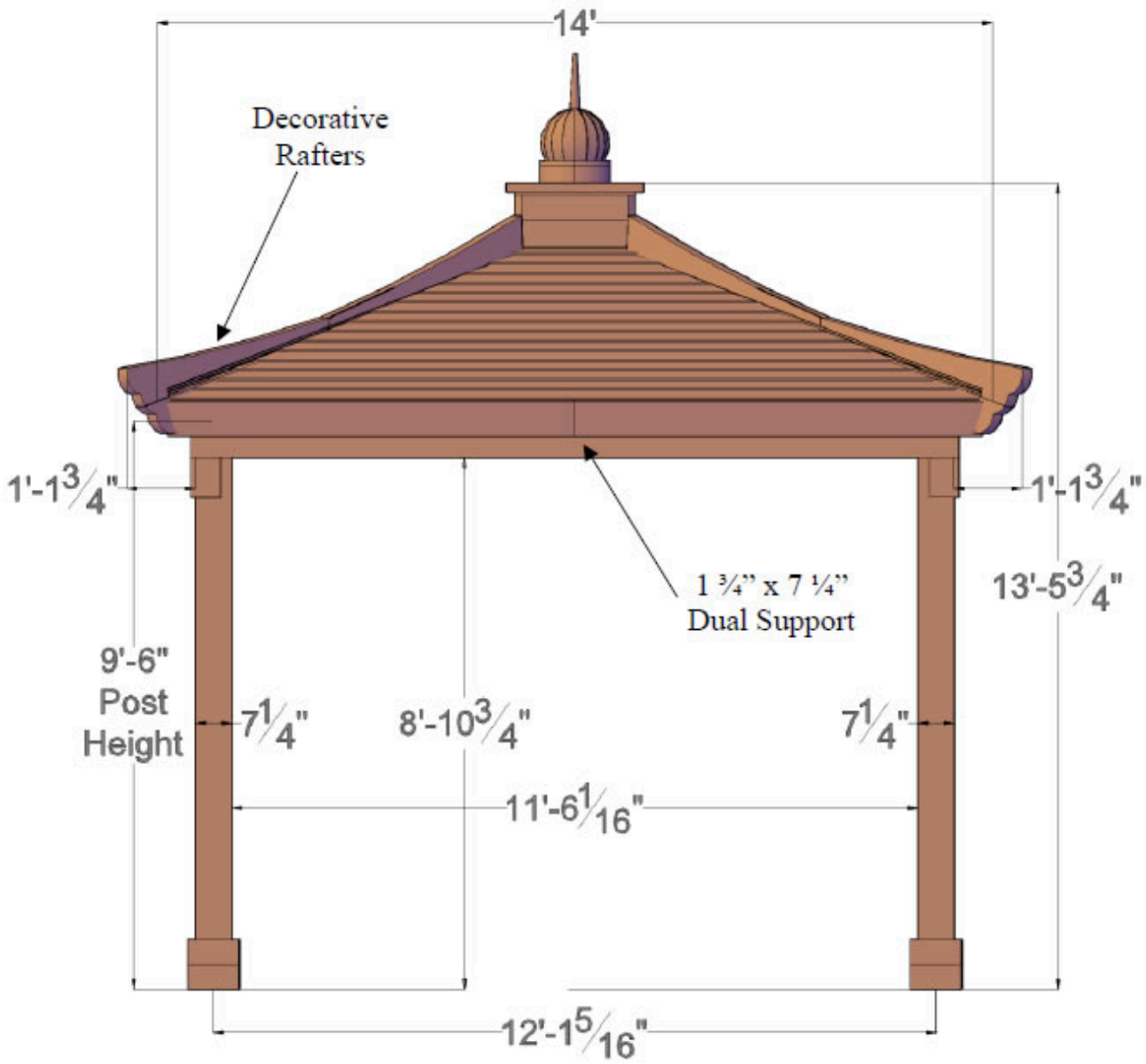
14'
Decorative Rafters
1'-1 3/4"
1'-1 3/4"
1 ¾" x 7 ¼" Dual Support
13'-5 3/4"
9'-6" Post Height
7 1/4"
8'-10 3/4"
7 1/4"
11'-6 1/16"
12'-1 5/16"

DRAWING 3

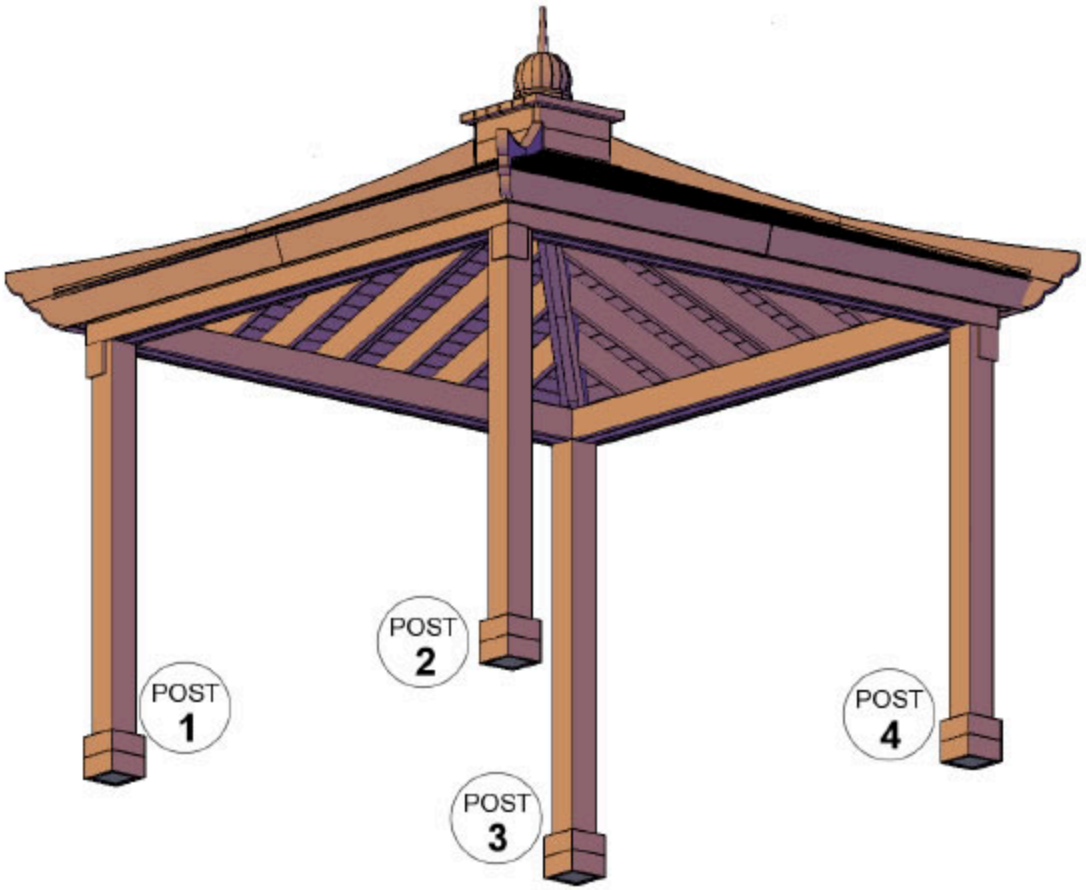

DRAWING 4

