FOREVER REDWOOD

DIMENSIONS & DRAWINGS

Modern Fat Timber Pergola

When we receive any Pergola order, we will provide you with a detailed set of drawings based on the options and sizes chosen. The drawings will clearly show all the details and dimensions from 3 different angles. They are an excellent tool for you to double check everything to be sure it is exactly as you'd like before it is built. Drawings are emailed within 5 business days and we'll revise your drawings as needed to make sure all details and sizing issues are perfected prior to beginning construction.

Top View	2
Length View	3
Width View	4
Curtain Rods & Fascia Trim Details.	5
Isometric View - Trims , Curtain Rods & Ceiling Fan Details	6
Fixed Slats Detail -1	7
Fixed Slats Detail - 2	8
Isometric View	9
Measurements	10

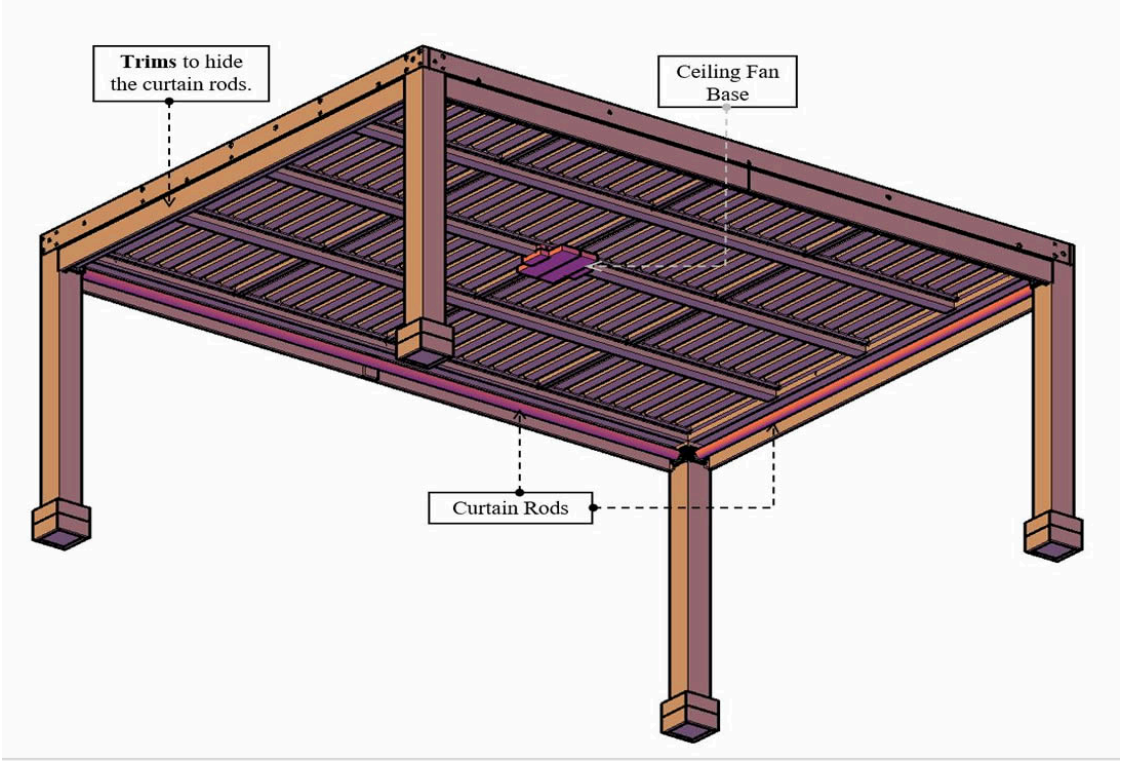

ISOMETRIC VIEW - TRIMS , CURTAIN RODS & CEILING FAN DETAILS

TOP VIEW

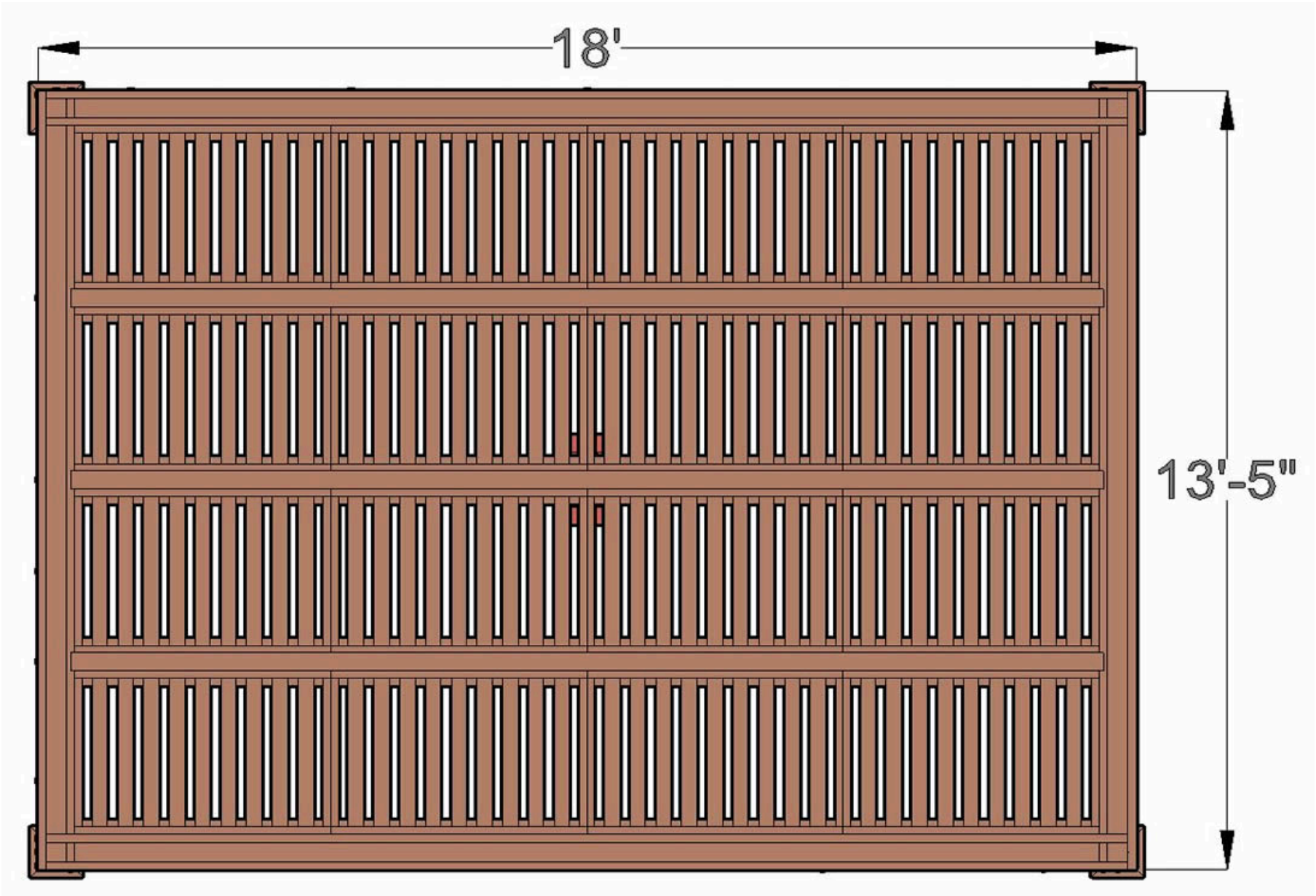

LENGTH VIEW

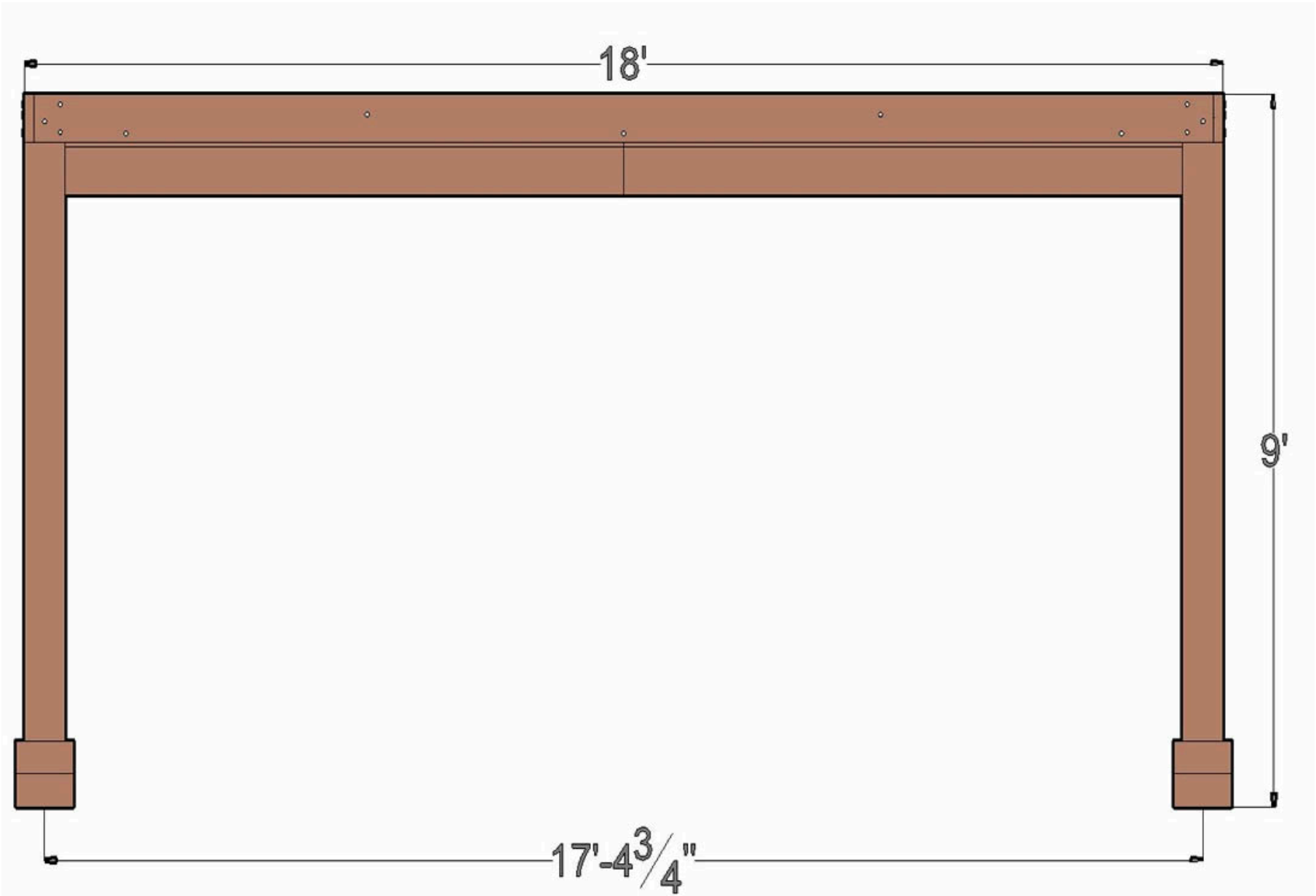

WIDTH VIEW

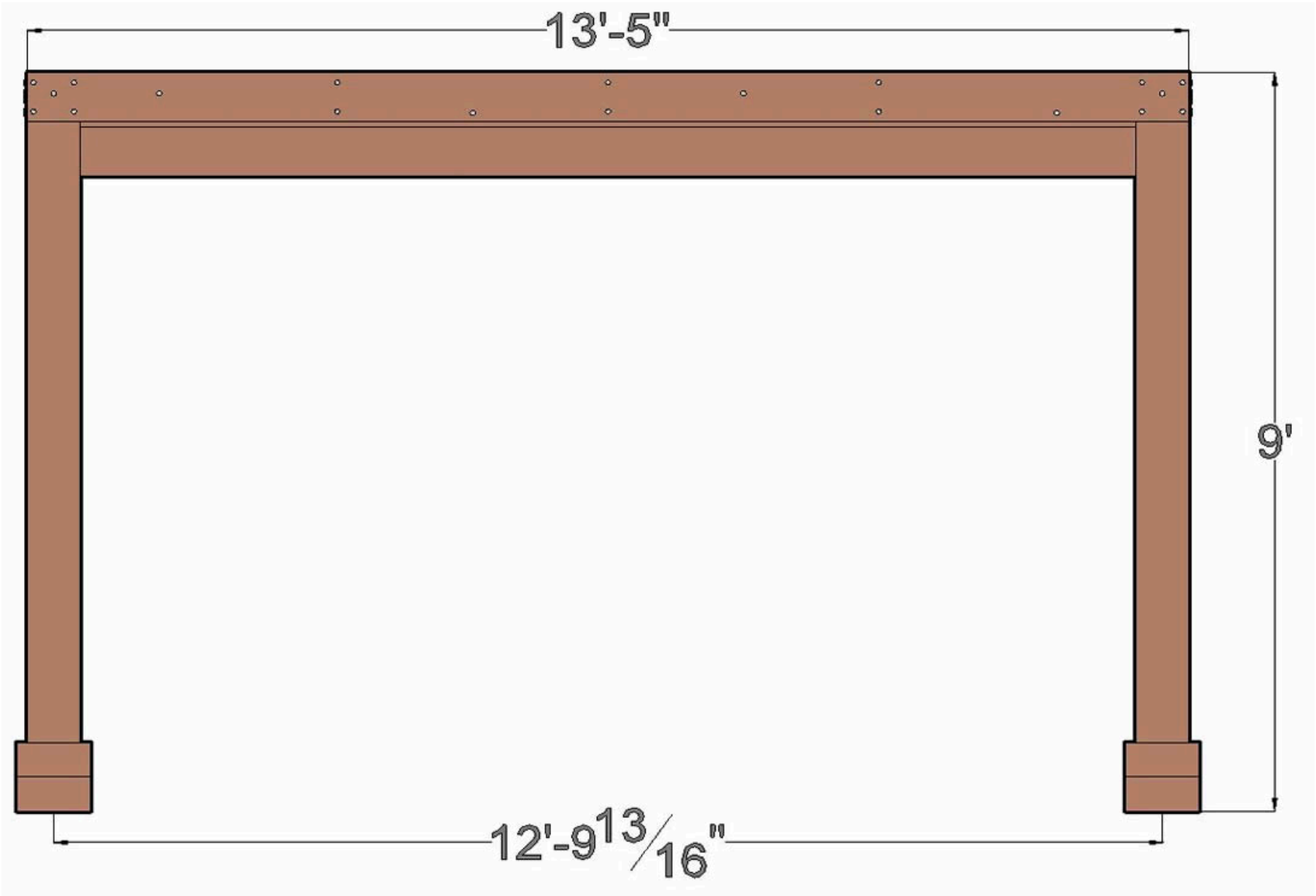

CURTAIN RODS & FASCIA TRIM DETAILS.

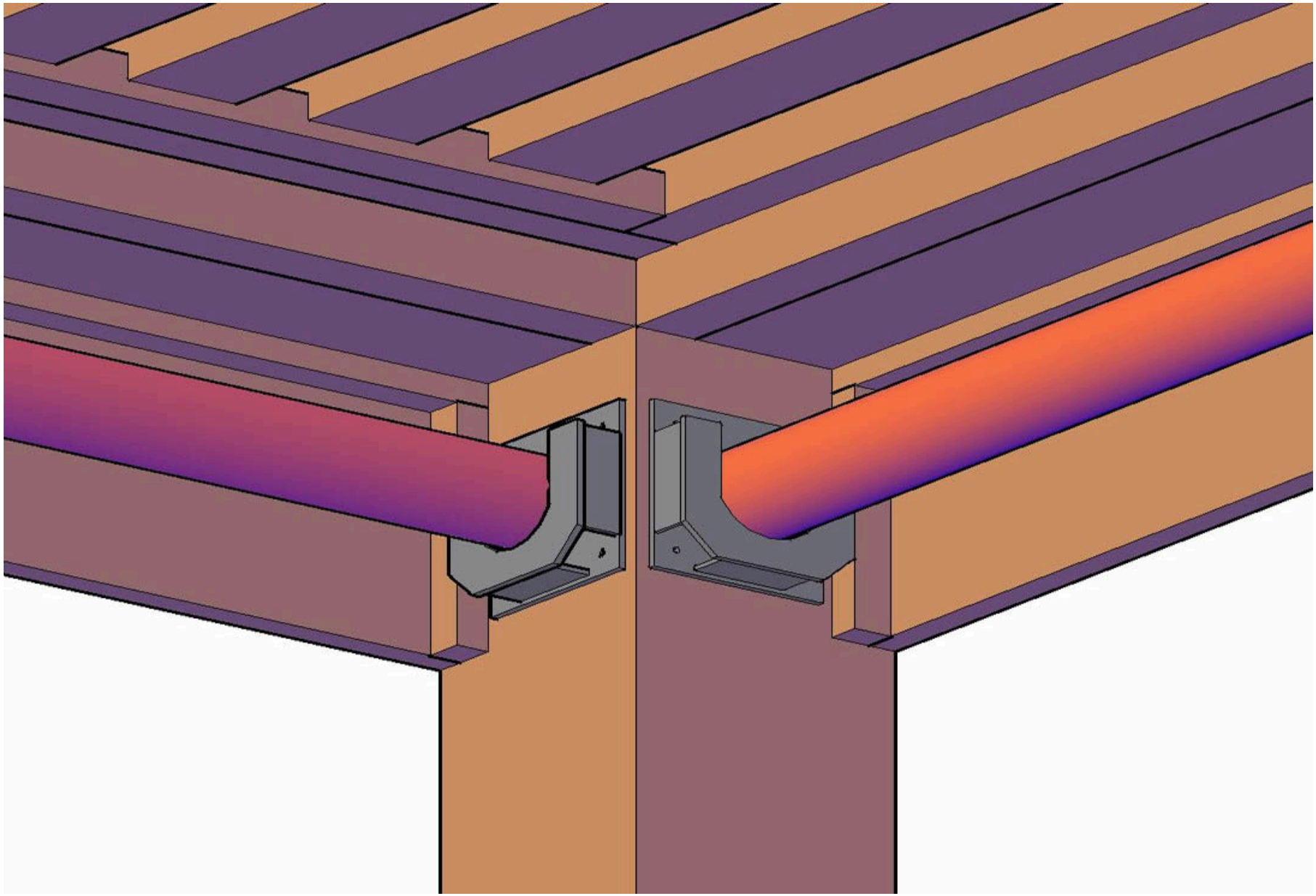

ISOMETRIC VIEW - TRIMS , CURTAIN RODS & CEILING FAN DETAILS

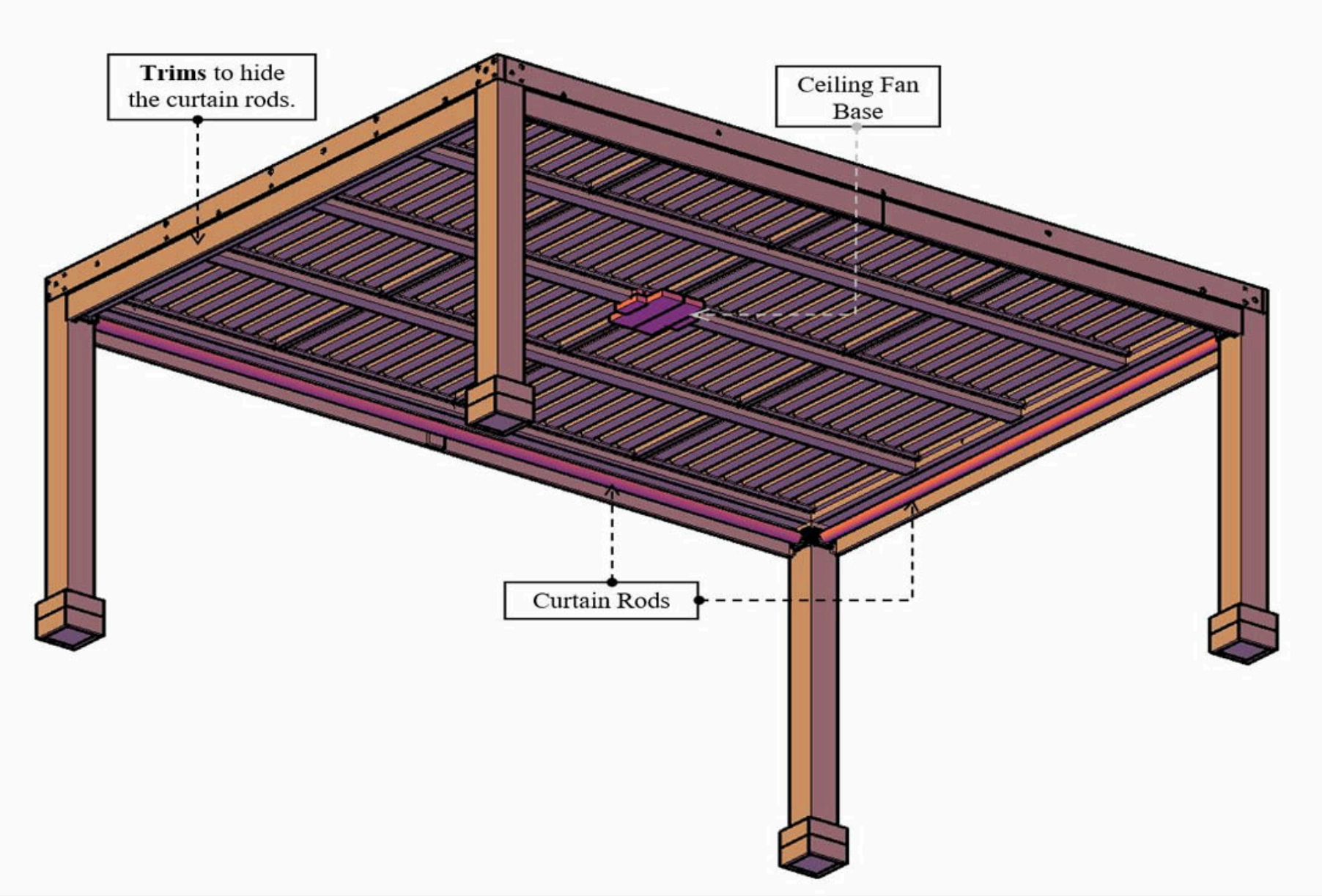

FIXED SLATS DETAIL -1

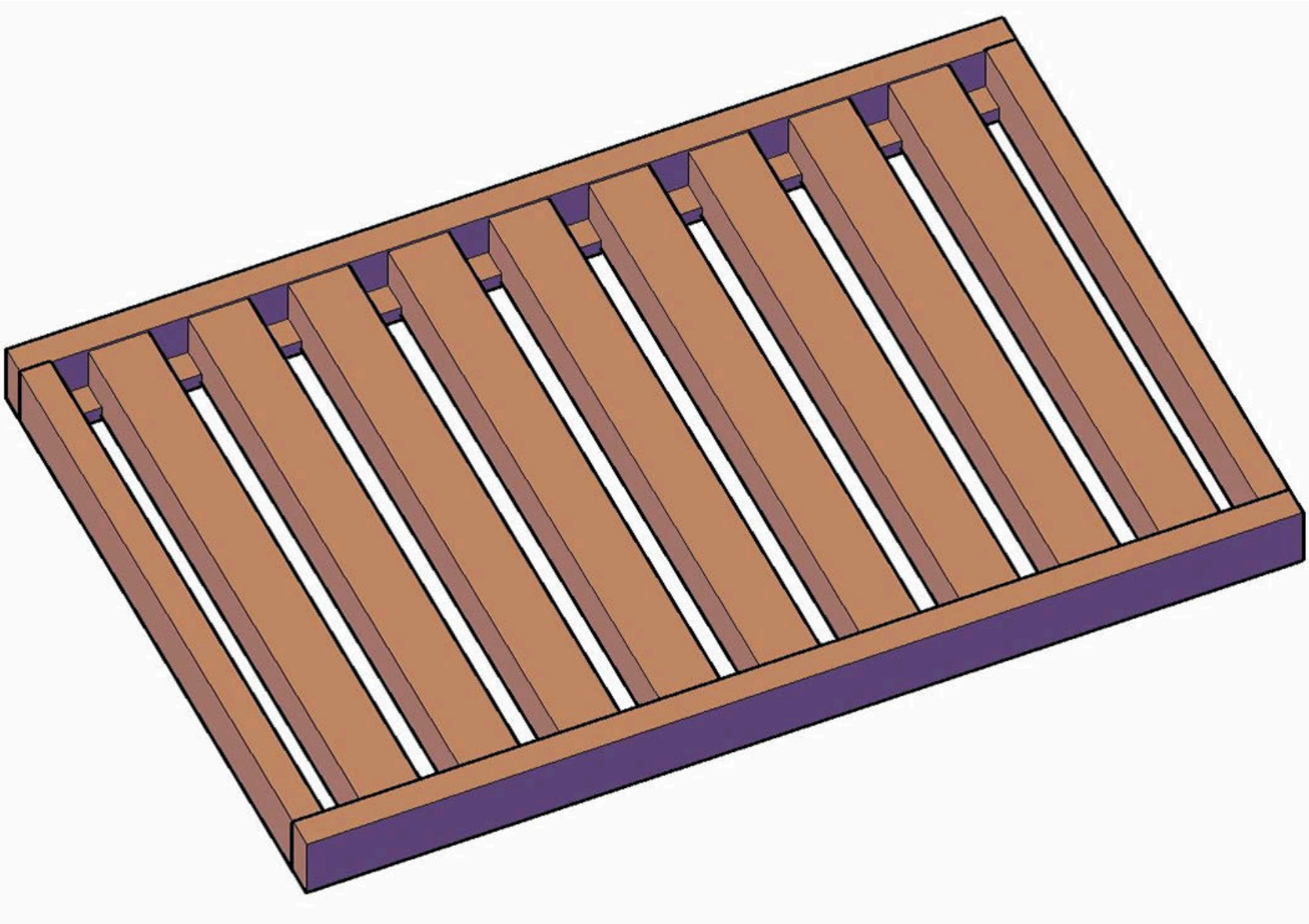

FIXED SLATS DETAIL - 2

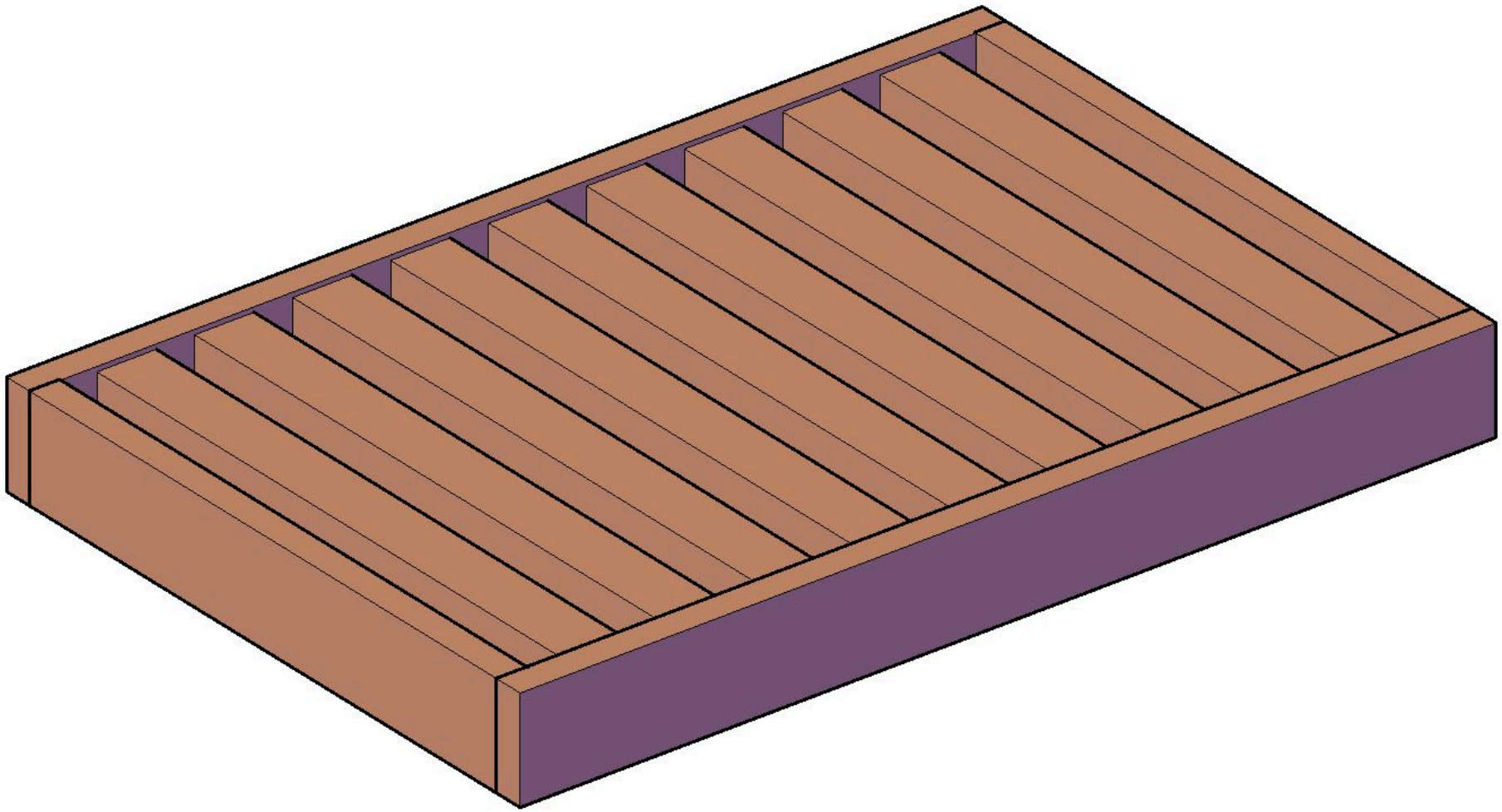

ISOMETRIC VIEW

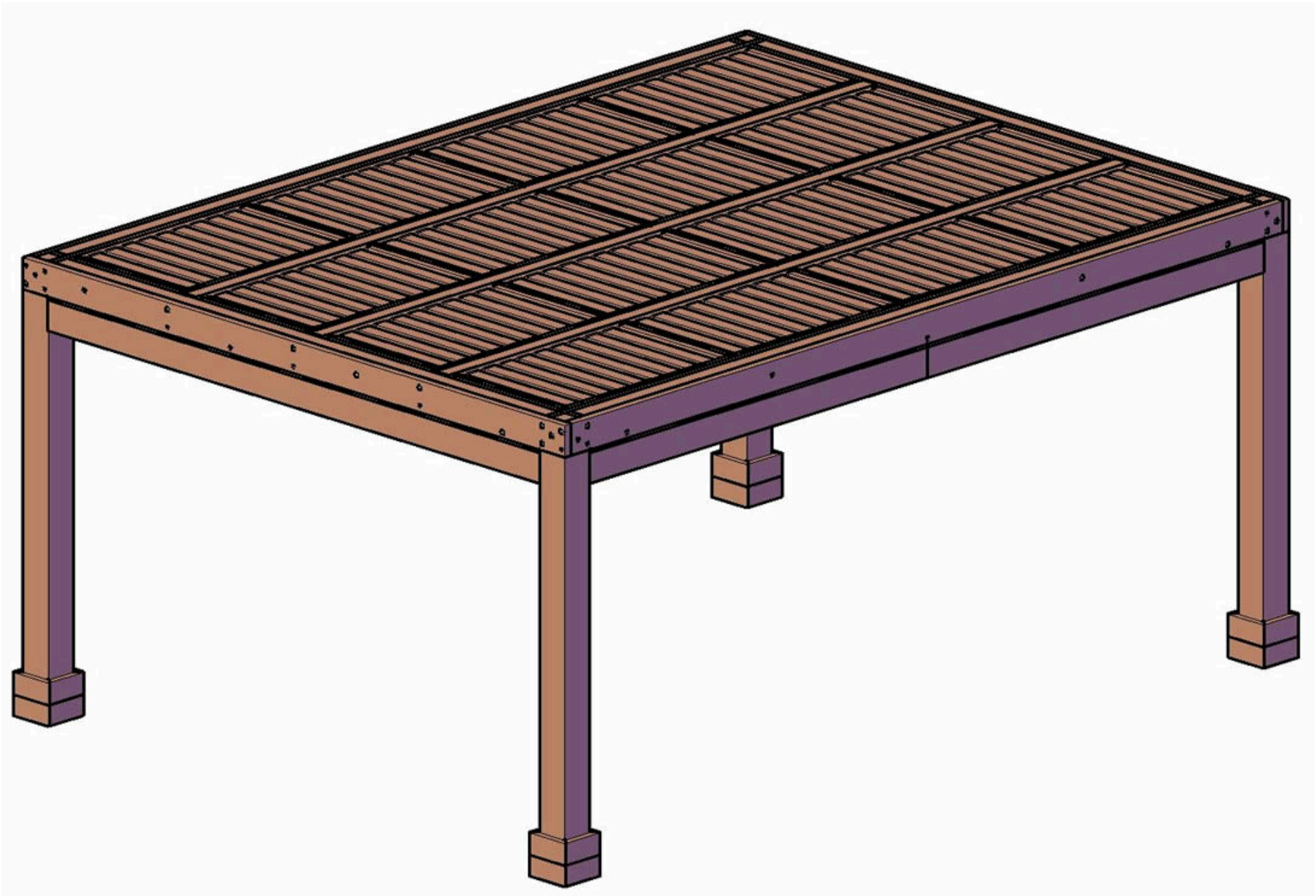

MEASUREMENTS

Corner posts are 7 1/4" by 7 1/4" (standard sized 8x8s) and are fulsh from roof dimensions (This can be adjusted to meet your needs just let us know).

Roof support timbers (supports) and rafters are 1 5/8" x 7 1/4". Slats are 2 3/4" x 3 1/2". If you prefer a different sizing or style write what you would like in the comments section or contact us.

Posts normally ship 9' long. 9 posts make the top of the roof 9' also and give you an 8' 4" clearance ("ceiling height") under the rafters. About 90% of our pergola customers go with the default 9' post height. If you'd like your pergola taller or shorter, just select Other Height and write in what you would like in the comments section.

The maximum roof size is 20' in either direction with a 4 post structure. The maximum span (with the standard timber sizes mentioned above) is 18' 2 1/2" on center between posts. Structures over 20' in any direction are built with an additional post to support roofs between 20 and 40 feet. For example, a 30' x 20' free standing pergola has 6 posts.

Forever Redwood Pergola kits are completely assembled in the shop prior to shipping to be certain everything fits together perfectly.

All timbers are notched into one another to increase structural strength and to lock all your pergolas timbers in place so they will never sag, twist or move. There are hundreds of notches in the larger pergolas. Full notching is rarely practiced because it is labor intensive, and it is one of the secrets to a long lasting beautiful pergola.