FOREVER REDWOOD

DIMENSIONS & DRAWINGS

Modern Louvered Garden Pergola

When we receive any Pergola order, we will provide you with a detailed set of drawings based on the options and sizes chosen. The drawings will clearly show all the details and dimensions from 3 different angles. They are an excellent tool for you to double check everything to be sure it is exactly as you'd like before it is built. Drawings are emailed within 5 business days, and we'll revise your drawings as needed to make sure all details and sizing issues are perfected prior to beginning construction.

Width View	2
Length View	3
Bottom View & Ceiling Fan	4
Isometric View - Post Details	5
Curtain Rods Detail	6
Isometric View & Curtain Rod Fascia	7
Measurements	8

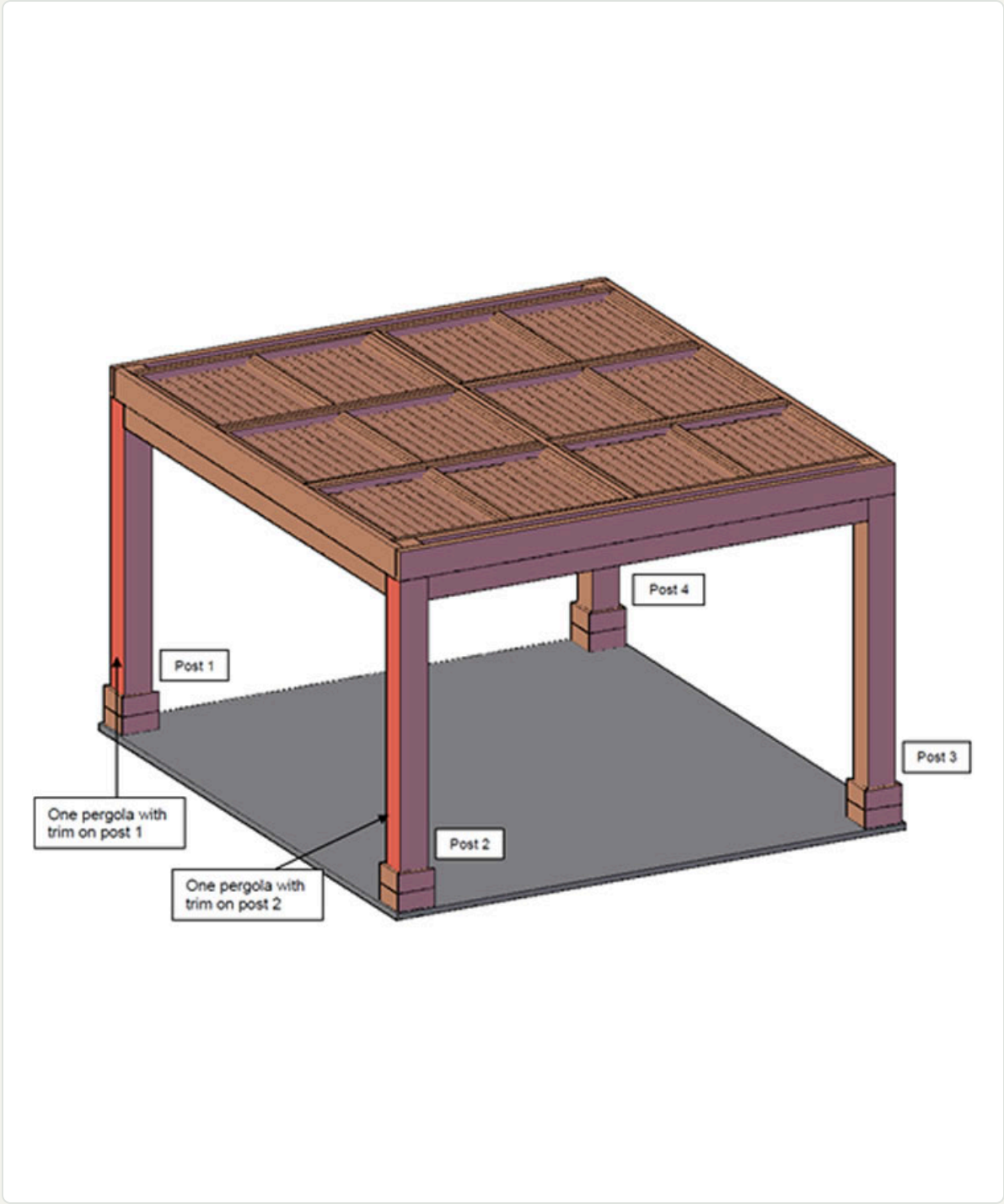

ISOMETRIC VIEW - POST DETAILS

WIDTH VIEW

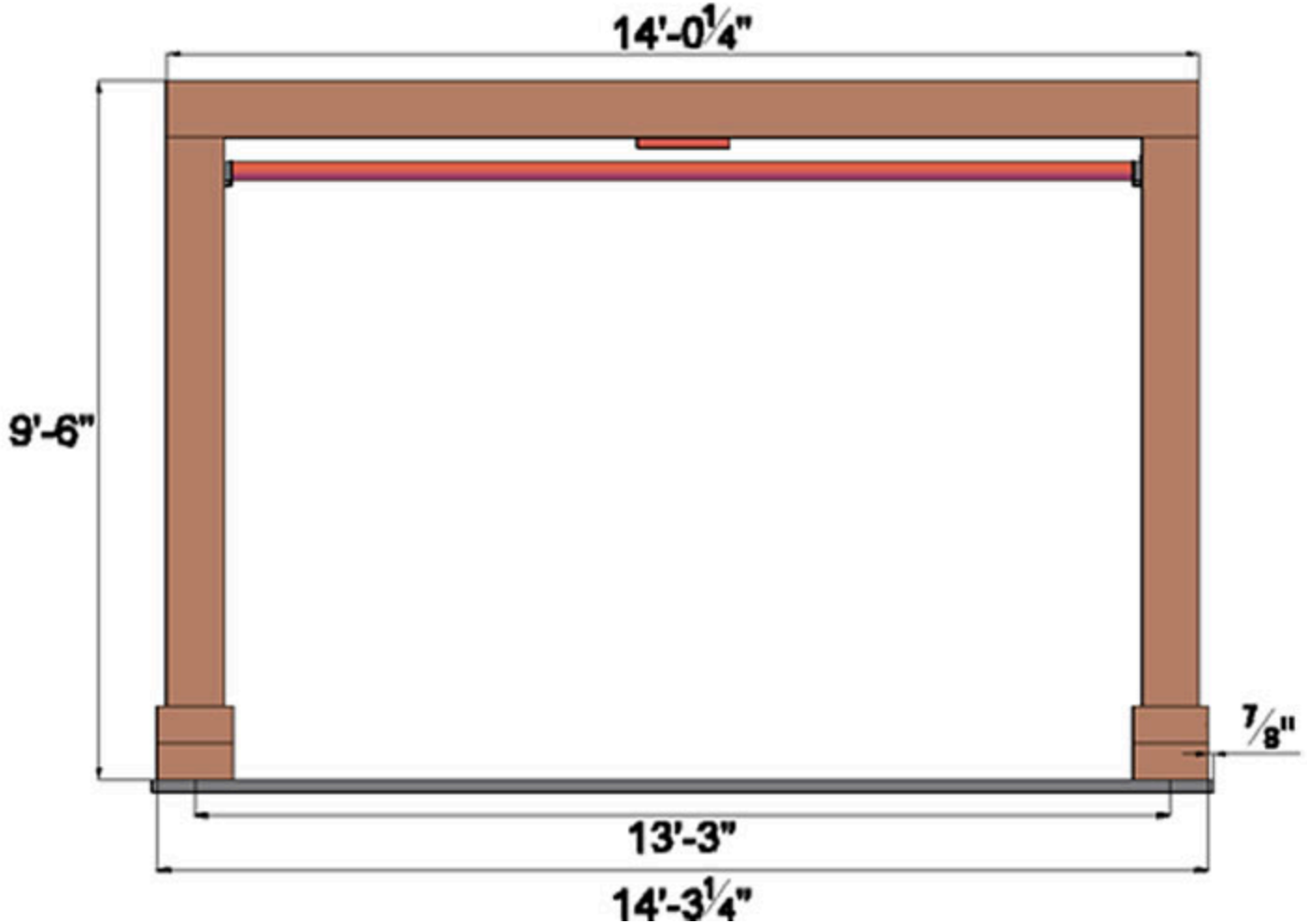

LENGTH VIEW

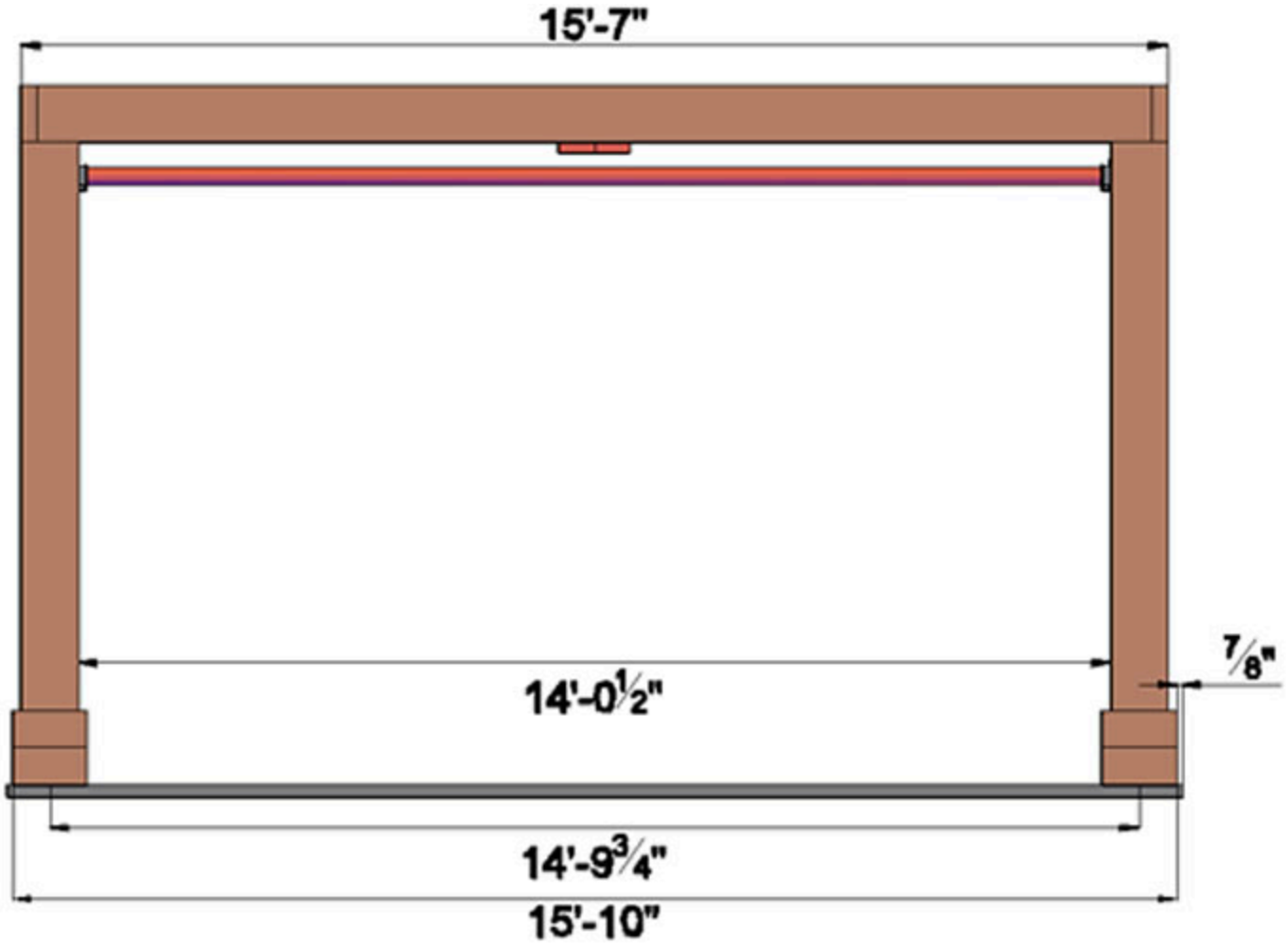

BOTTOM VIEW & CEILING FAN

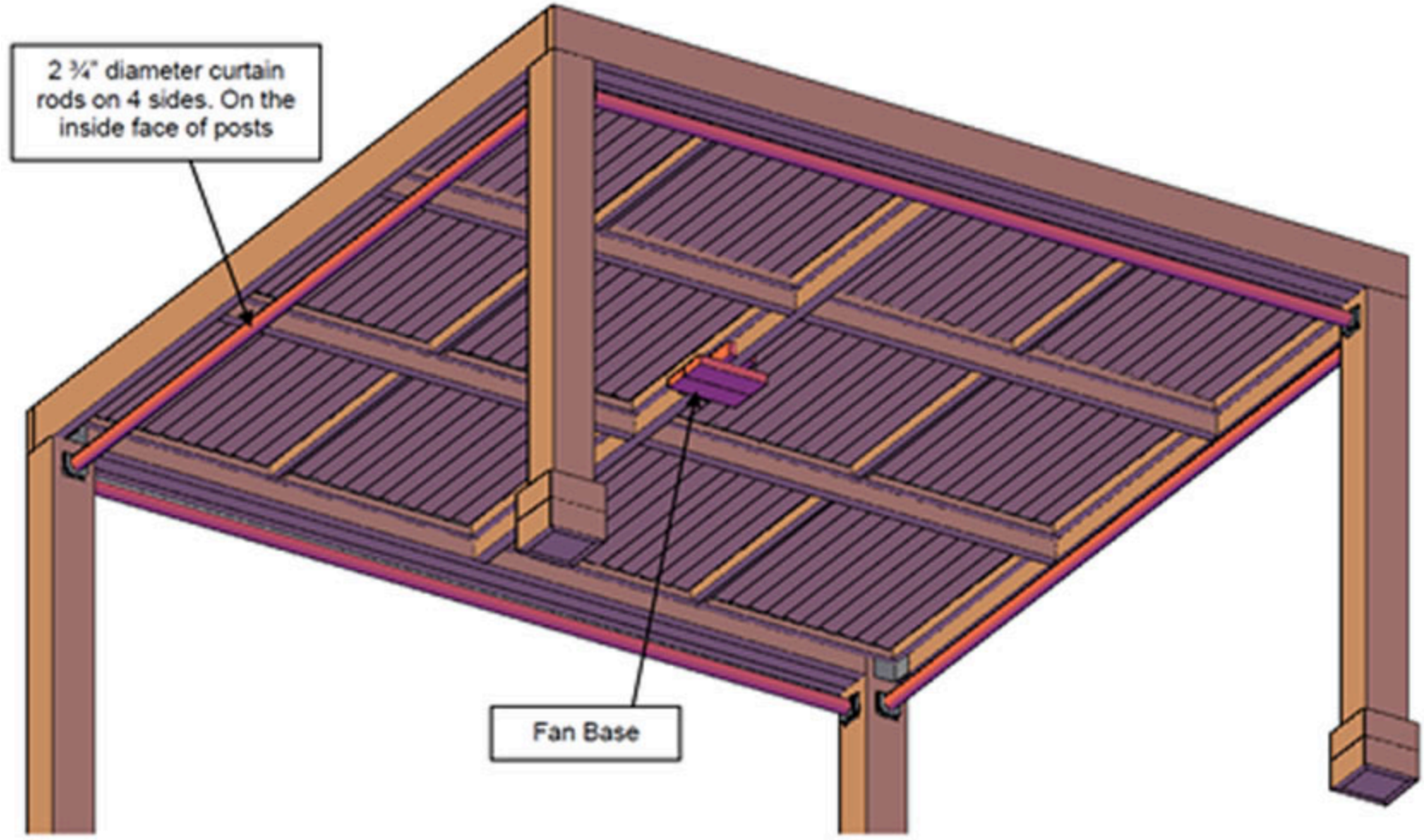

ISOMETRIC VIEW - POST DETAILS

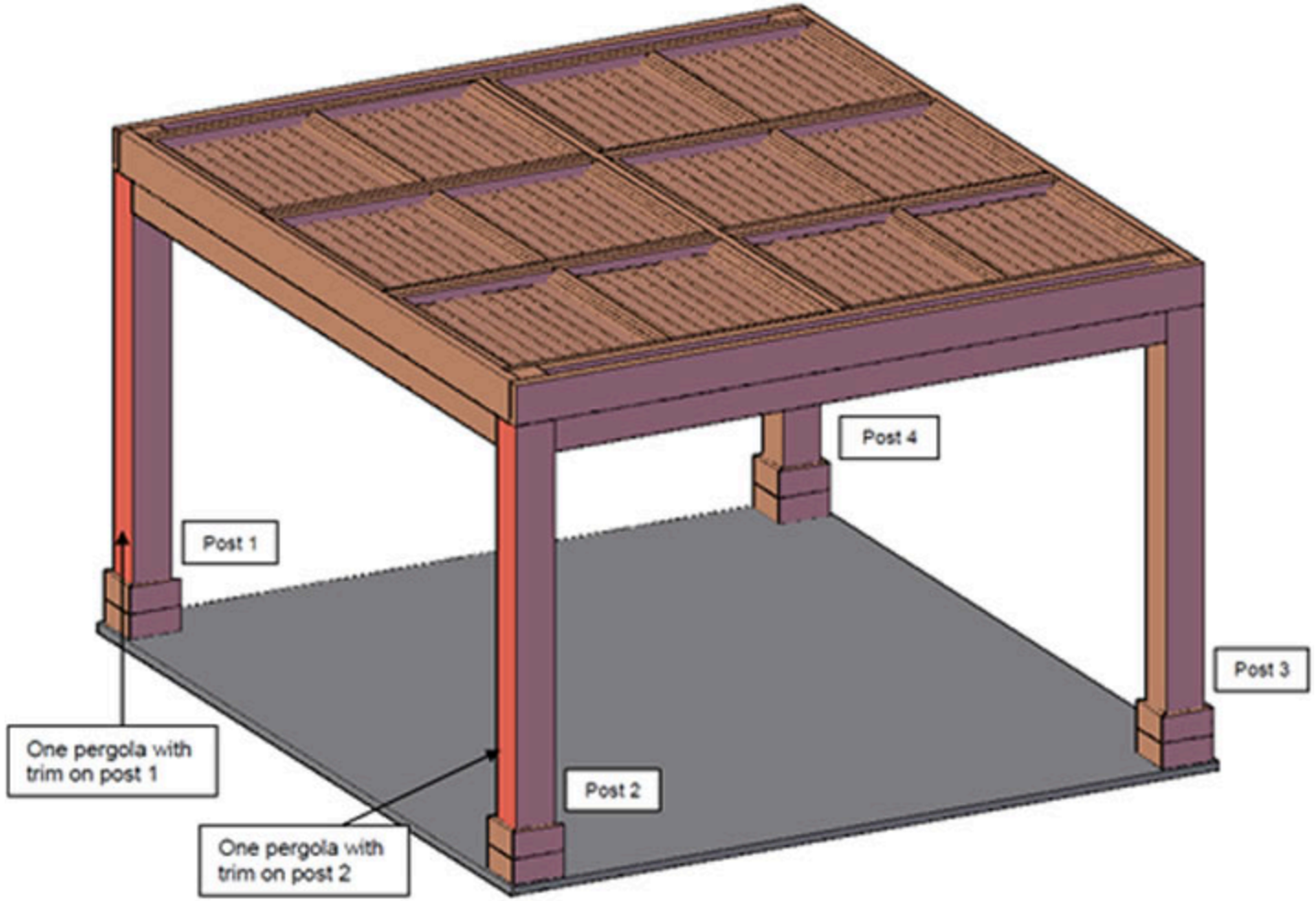

CURTAIN RODS DETAIL

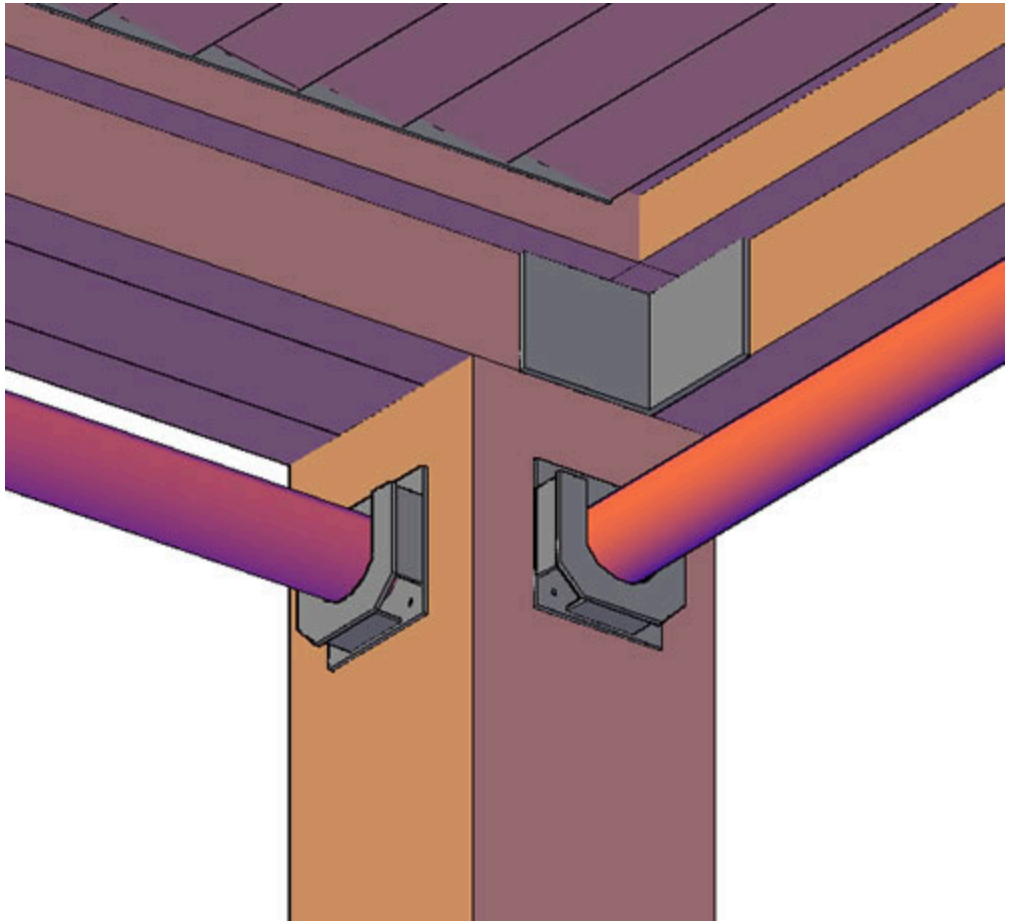

ISOMETRIC VIEW & CURTAIN ROD FASCIA

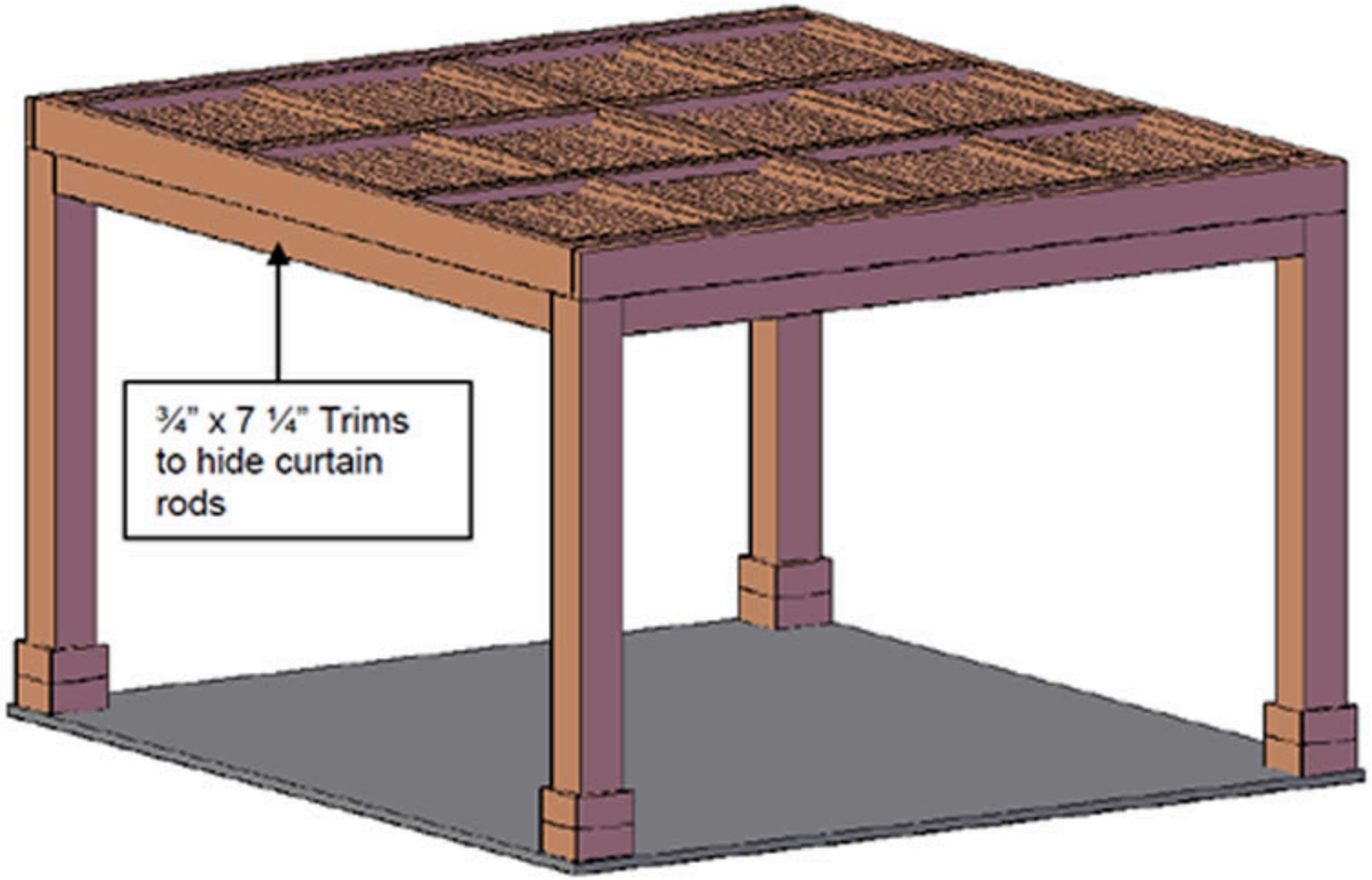

MEASUREMENTS

Pergola (Roof) Size (ft)	Approx. weight
10 x 10	705 lbs.
10 x 12	795 lbs.
10 x 14	885 lbs.
10 x 15	930 lbs.
10 x 16	975 lbs.
10 x 18	1065 lbs.
10 x 20	1155 lbs.
12 x 12	903 lbs.
12 x 14	1011 lbs.
12 x 15	1065 lbs.
12 x 16	1119 lbs.
12 x 18	1227 lbs.
12 x 20	1335 lbs.

Pergola (Roof) Size (ft)	Approx. weight
14 x 14	1137 lbs.
14 x 16	1263 lbs.
14 x 18	1389 lbs.
14 x 20	1515 lbs.
15 x 15	1268 lbs.
15 x 18	1470 lbs.
15 x 20	1605 lbs.
16 x 16	1407 lbs.

Pergola (Roof) Size (ft)	Approx. weight
16 x 18	1551 lbs.
16 x 20	1695 lbs.
18 x 18	1713 lbs.
18 x 20	1875 lbs.
20 x 20	2055 lbs.

Corner posts are 5 1/2" by 5 1/2" (standard sized 6x6s).

Roof support timbers (lintels) and rafters are 1 7/8" x 5 3/4". If you prefer a different sizing or style, write what you would like in the comments section or contact us.

Posts normally ship 9' long. 9' posts make the top of the roof 9' as well, giving you an 8' 4" clearance ("ceiling height") under the rafters. About 90% of our pergola customers go with the default 9' post height. If you'd like your pergola taller or shorter, just select Other Height and write in what you would like in the comments section.

The maximum roof size is 20' in either direction with a 4 post structure. The maximum span (with the standard timber sizes mentioned above) is 18' 2 1/2" on center between posts. Structures over 20' in any direction are built with an additional post to support roofs between 20 and 40 feet. For example, a 30' x 20' free standing pergola has 6 posts.

Forever Redwood Pergola kits are completely assembled in the shop prior to shipping to be certain everything fits together perfectly. All timbers are notched into one another both to increase structural strength and to lock all your pergolas timbers in place so they will never sag, twist, or move. There are hundreds of notches in the larger pergolas. Full notching is rarely practiced because it is labor intensive, but it is one of the secrets to a long lasting and beautiful pergola.