FOREVER REDWOOD

DIMENSIONS & DRAWINGS

Small Arched Open Sky Pergolas

We can customize our Pergolas to suit your needs. Just tell us what size and what options you want. Prior to building, we provide our customers with a detailed set of drawings based on their initial choices and sizes. The drawings are the perfect tool to show you all the details and dimensions. It allows you to double check everything to be sure it is exactly as you'd like before it is built. Drawings are emailed within 5 business days and we'll revise your drawings as needed to make sure all details and sizing issues are perfected prior to beginning construction.

Top View 2
Front View 3
Lader View 4
Isometric View 5
Drawing 5 6

foreverredwood.com · (866) 332-2403

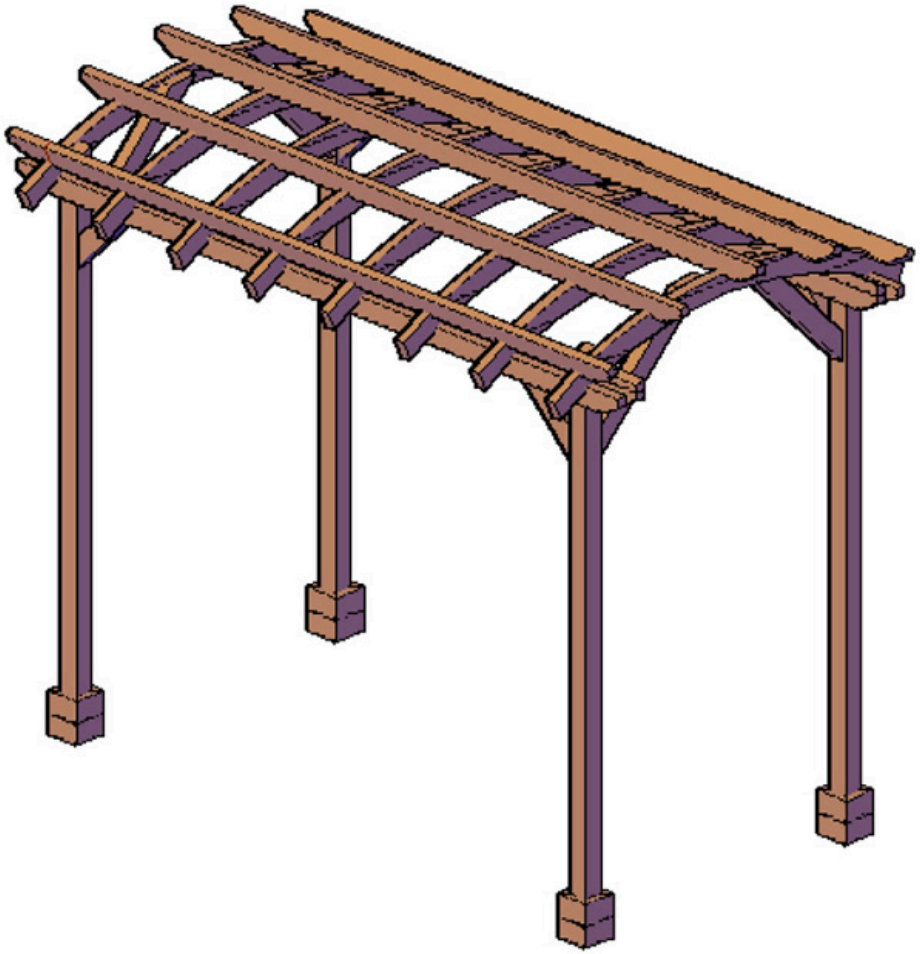

ISOMETRIC VIEW

TOP VIEW

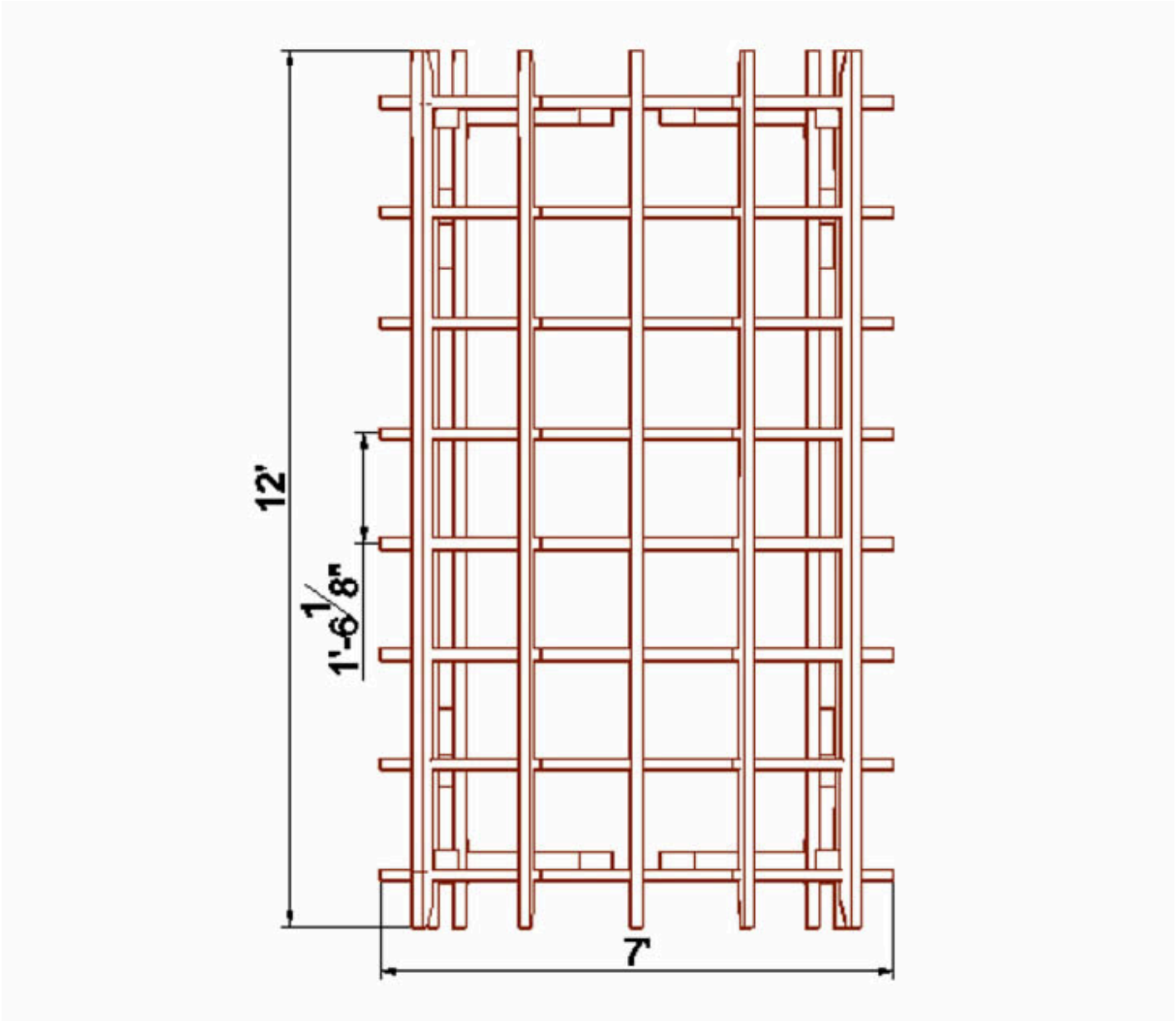

FRONT VIEW

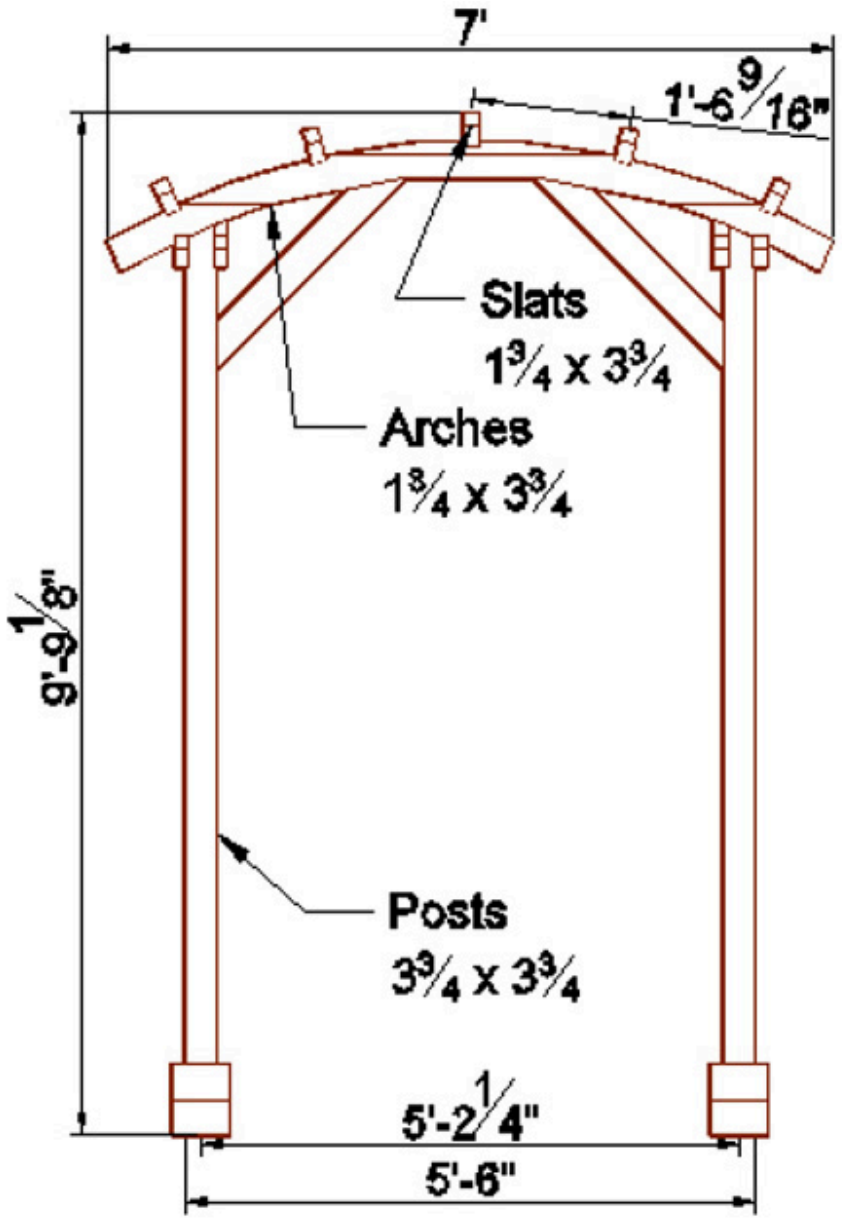

LADER VIEW

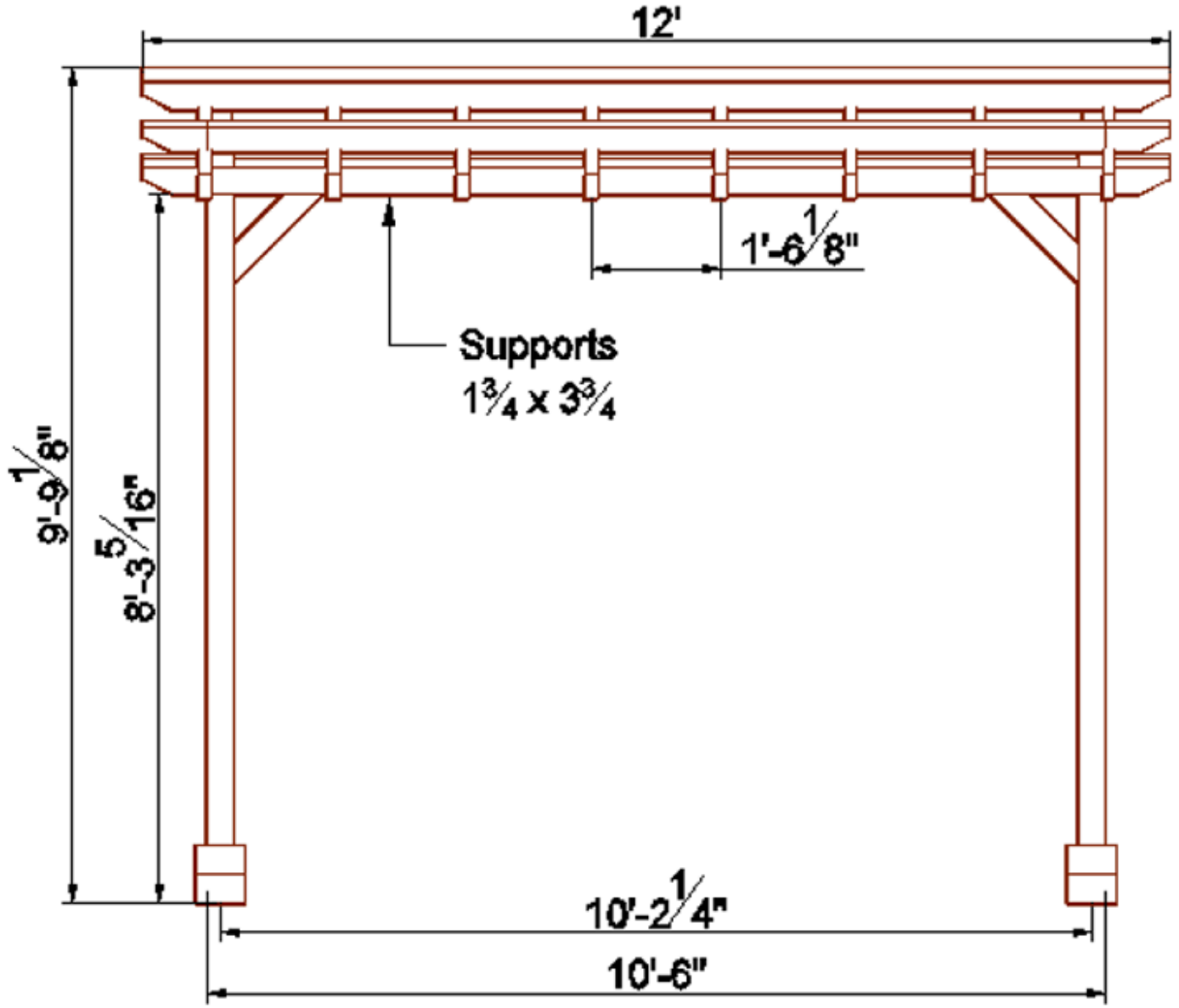

ISOMETRIC VIEW

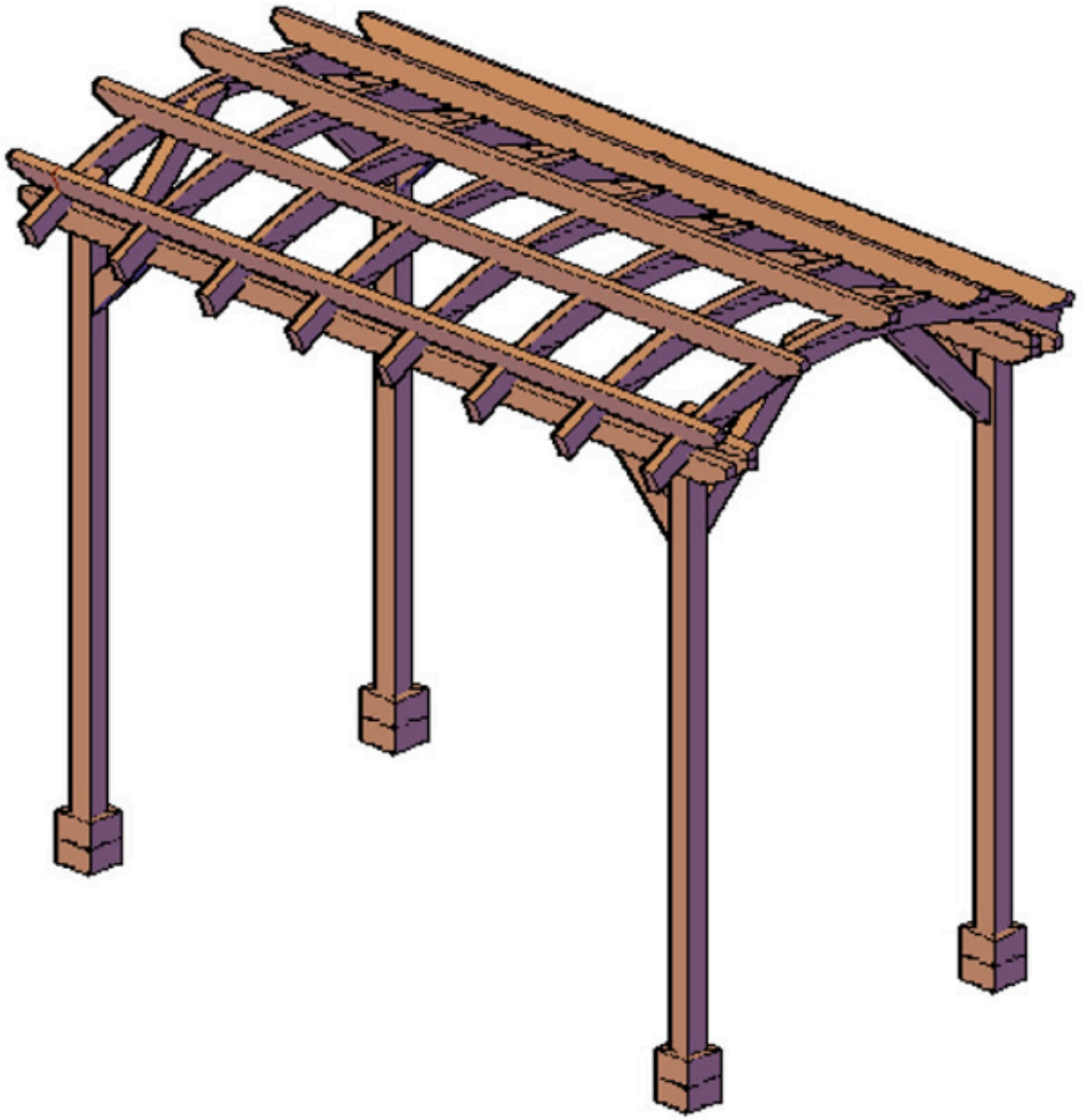

DRAWING 5

Corner posts are 5 1/2" by 5 1/2" (standard sized 4x4s) and are recessed 12" in from roof dimensions (This can be adjusted to meet your needs just let us know).

Roof support timbers (lintels) and rafters are 1 7/8" x 7 1/2". If you prefer a different sizing or style write what you would like in the comments section or contact us.

Posts normally ship 9' long. 9 posts make the top of the roof 9' also and give you an 8' 4" clearance ("ceiling height") under the rafters. About 90% of our pergola customers go with the default 9' post height. If you'd like your pergola taller or shorter, just select Other Height and write in what you would like in the comments section.

The maximum roof size is 20' in either direction with a 4 post structure. The maximum span (with the standard timber sizes mentioned above) is 18' 2 1/2" on center between posts. Structures over 20' in any direction are built with an additional post to support roofs between 20 and 40 feet. For example, a 30' x 20' free standing pergola has 6 posts.

Forever Redwood Pergola kits are completely assembled in the shop prior to shipping to be certain everything fits together perfectly. All timbers are notched into one another to increase structural strength and to lock all your pergolas timbers in place so they will never sag, twist or move. There are hundreds of notches in the larger pergolas. Full notching is rarely practiced because it is labor intensive, but it is one of the secrets to a long lasting beautiful pergola.

All assembly hardware is included and is stainless steel.

For additional long-term structural strength, we add solid timber blocking in-between the dual support timbers as shown in the drawing below. With this blocking, the dual supports are in effect converted into one solid 5 3/4 inch x 61/2 inch or 7 1/4 inch x 6 1/2 inch timber as shown below:

