FOREVER REDWOOD

DIMENSIONS & DRAWINGS

Breezy Pavilion

The Breezy Pavilion is available in lengths from 8' to 60' and widths from 8' to 20'. The length and width are the overall roof measurements. The standard roof overhang is 12".

Top View	2
Front View	3
Lader View	4
Isometric View	5
Drawing 5	6

foreverredwood.com · (866) 332-2403



ISOMETRIC VIEW

TOP VIEW

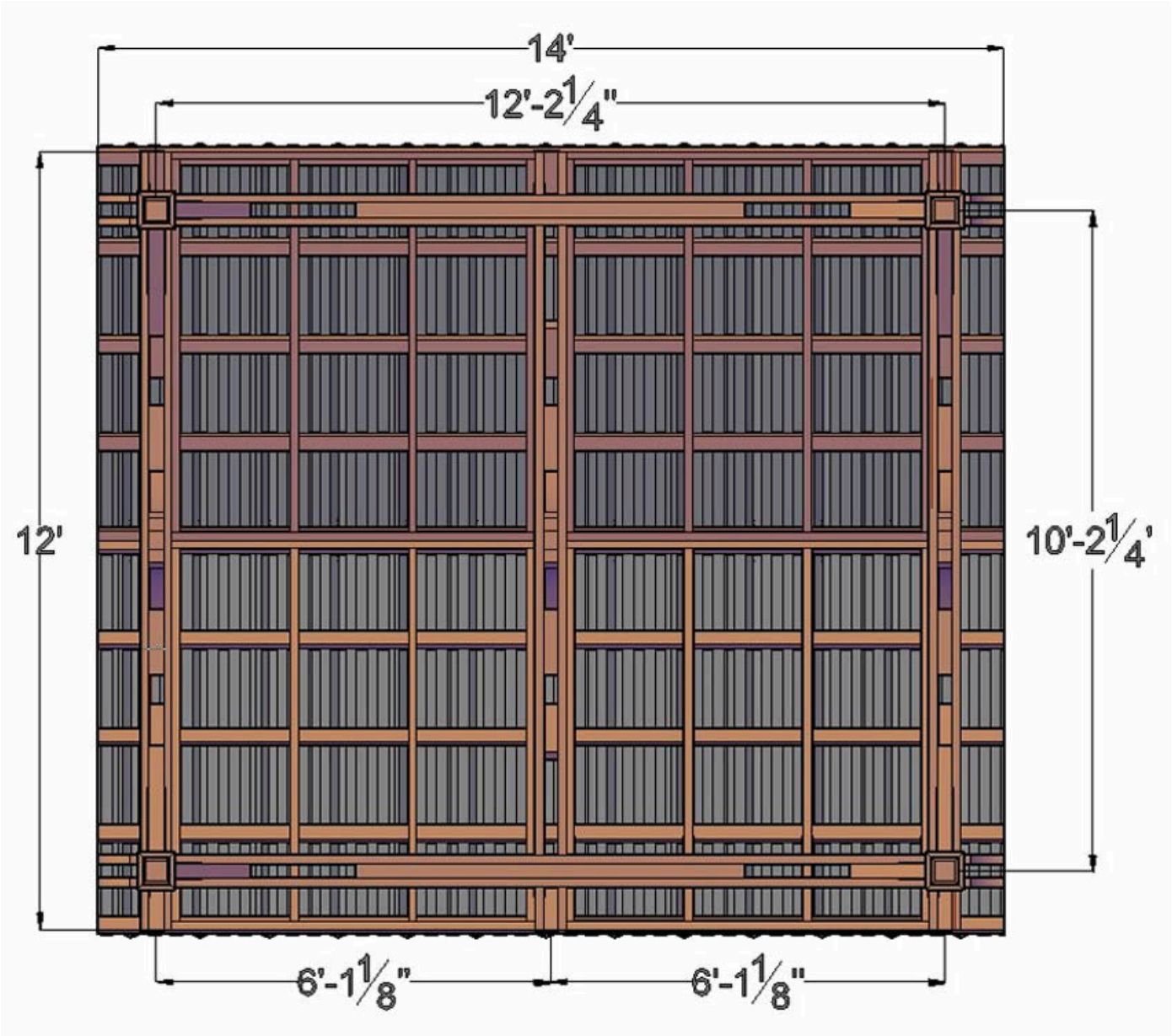

FRONT VIEW

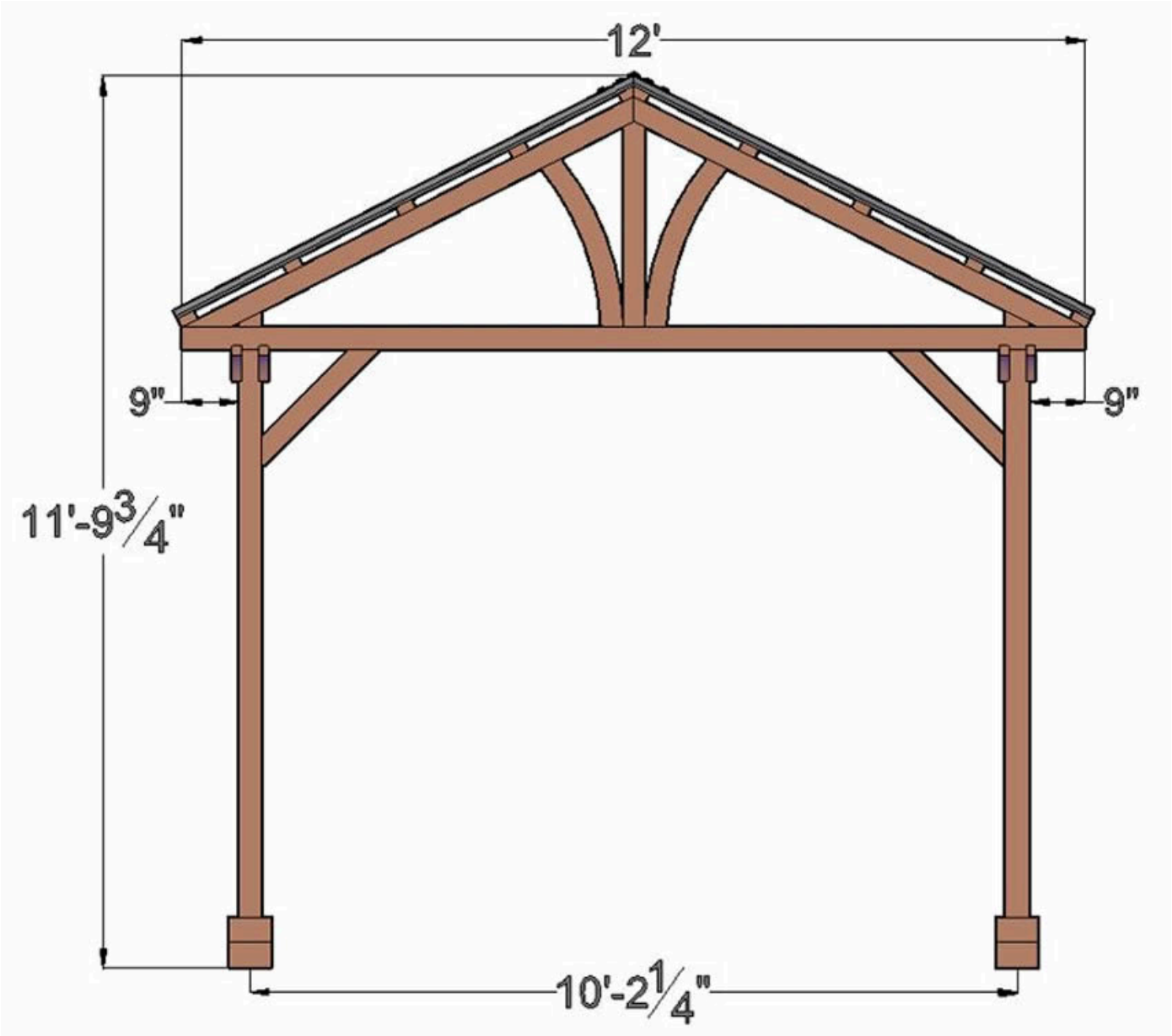

LADER VIEW

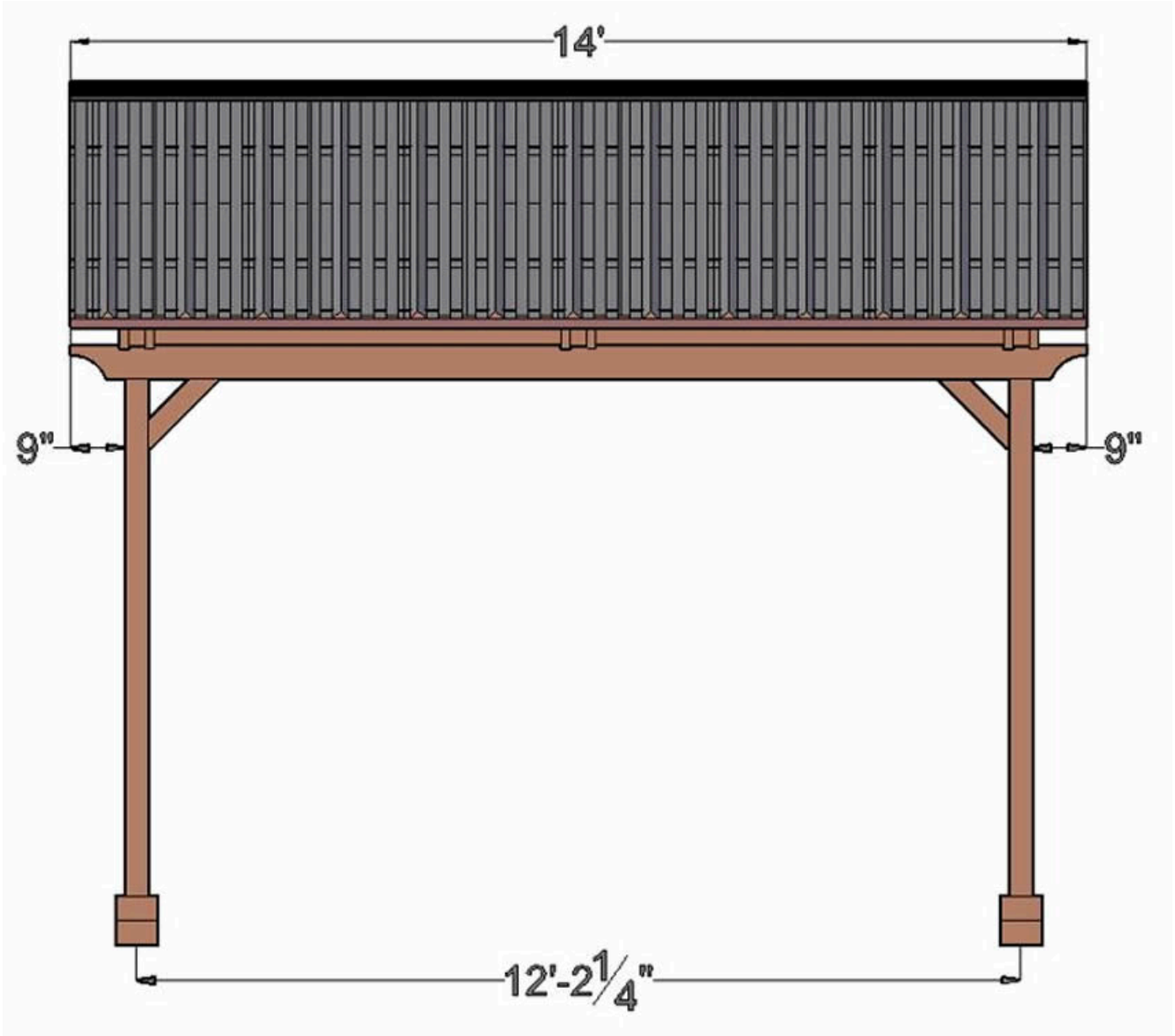

ISOMETRIC VIEW



DRAWING 5

For additional long-term structural strength, we add solid timber blocking in-between the dual support timbers as shown in the drawing below. With this blocking, the dual supports are in effect converted into one solid 7 1/4 inch x 6 1/2 inch timber as shown below:

