FOREVER REDWOOD

DIMENSIONS & DRAWINGS

Cantilevered Pergola

We customize our Pergolas to suit your needs. Just tell us what size and options you want. Prior to building, we provide our customers with a detailed set of drawings based on their initial choices and sizes. Our drawing process is the perfect tool to illustrate each and every detail and dimension. It allows you to double check every aspect to be sure it is exactly as you'd like before we begin to build. Drawings are emailed within 5 business days and we'll revise your drawings as much as needed to make sure that every issue is perfected prior to beginning construction.

Top View 2
Front View 3
Side View 4
Isometric View & QR for AR Experience 5

foreverredwood.com · (866) 332-2403

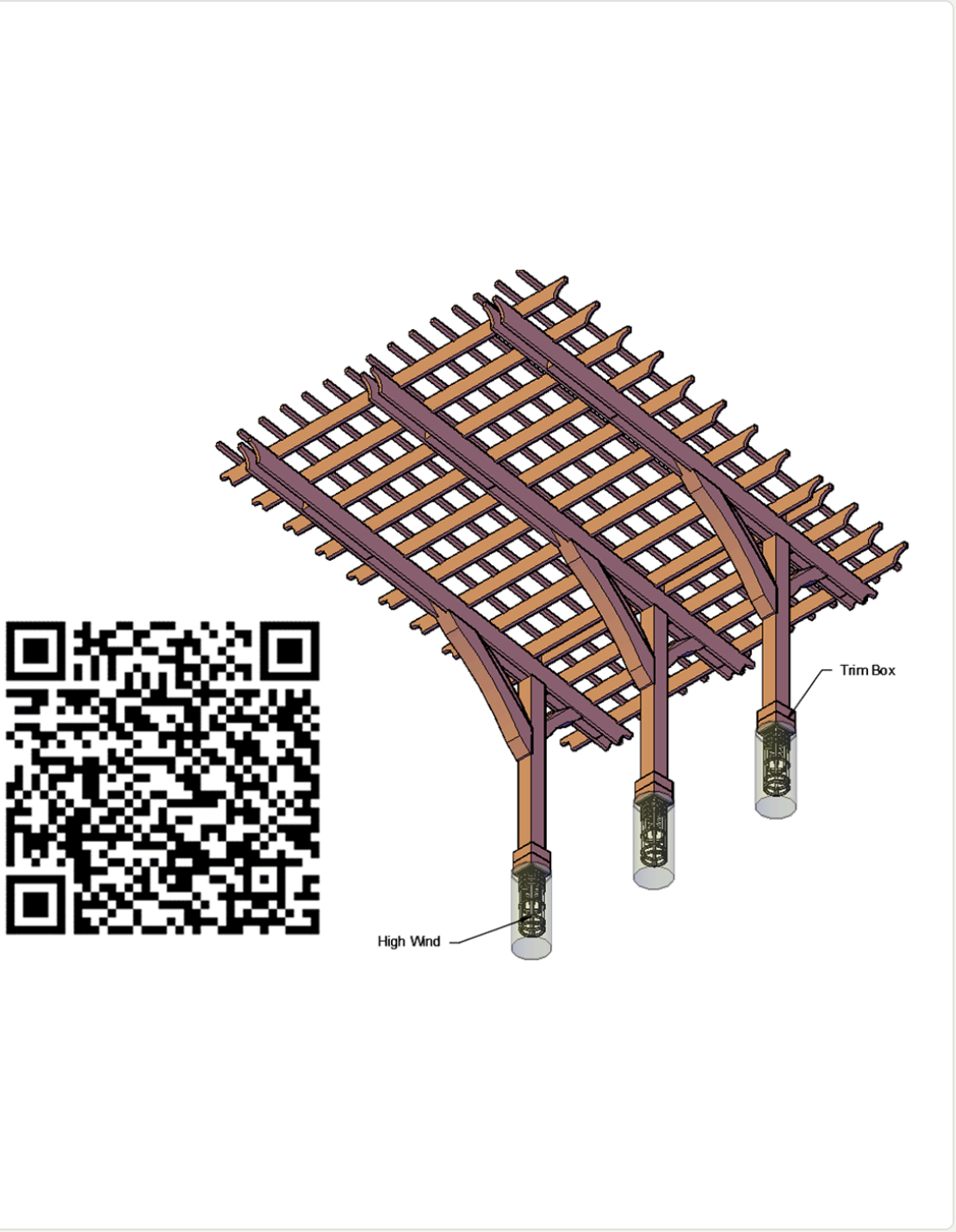

ISOMETRIC VIEW & QR FOR AR EXPERIENCE

TOP VIEW

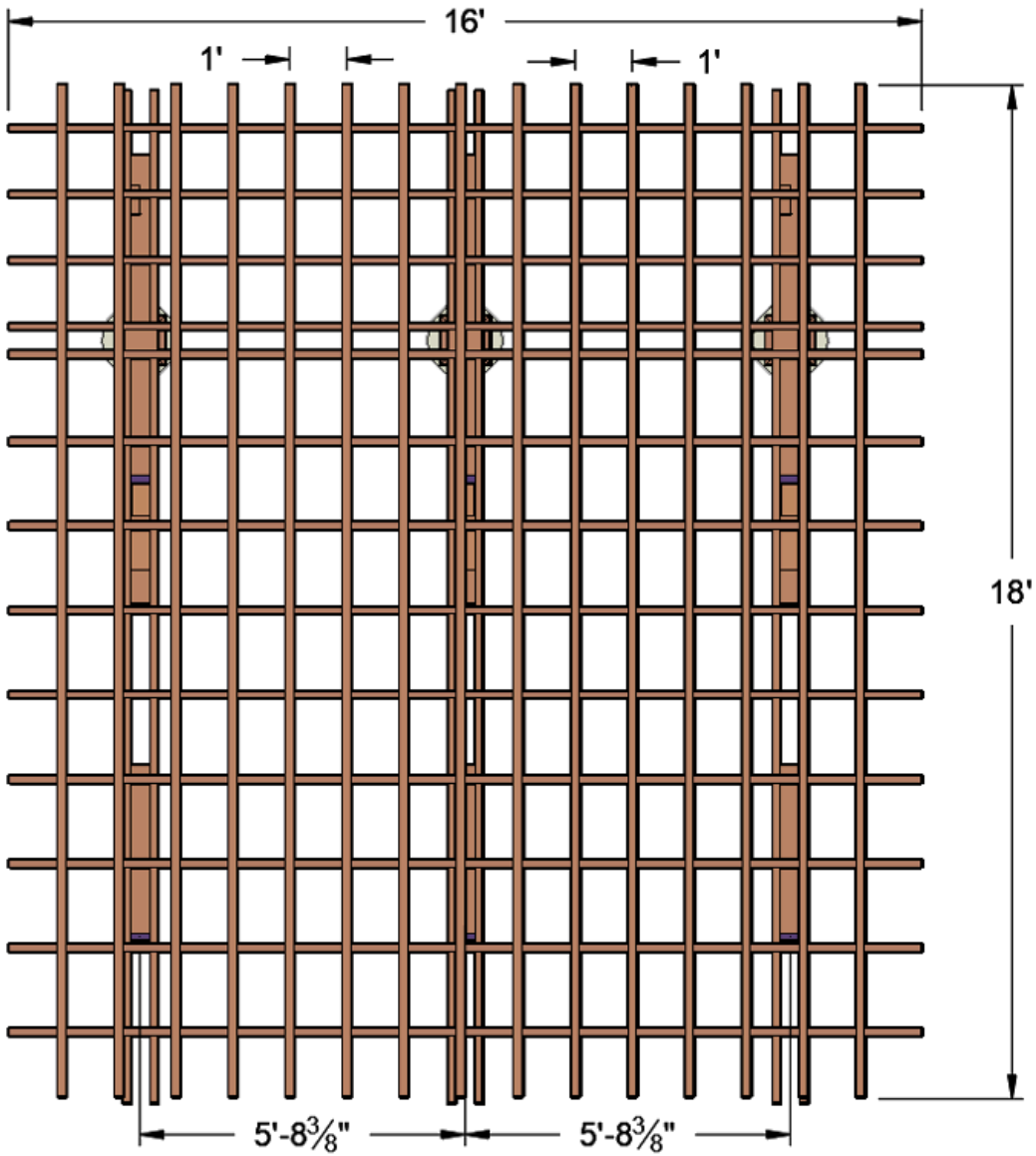

FRONT VIEW

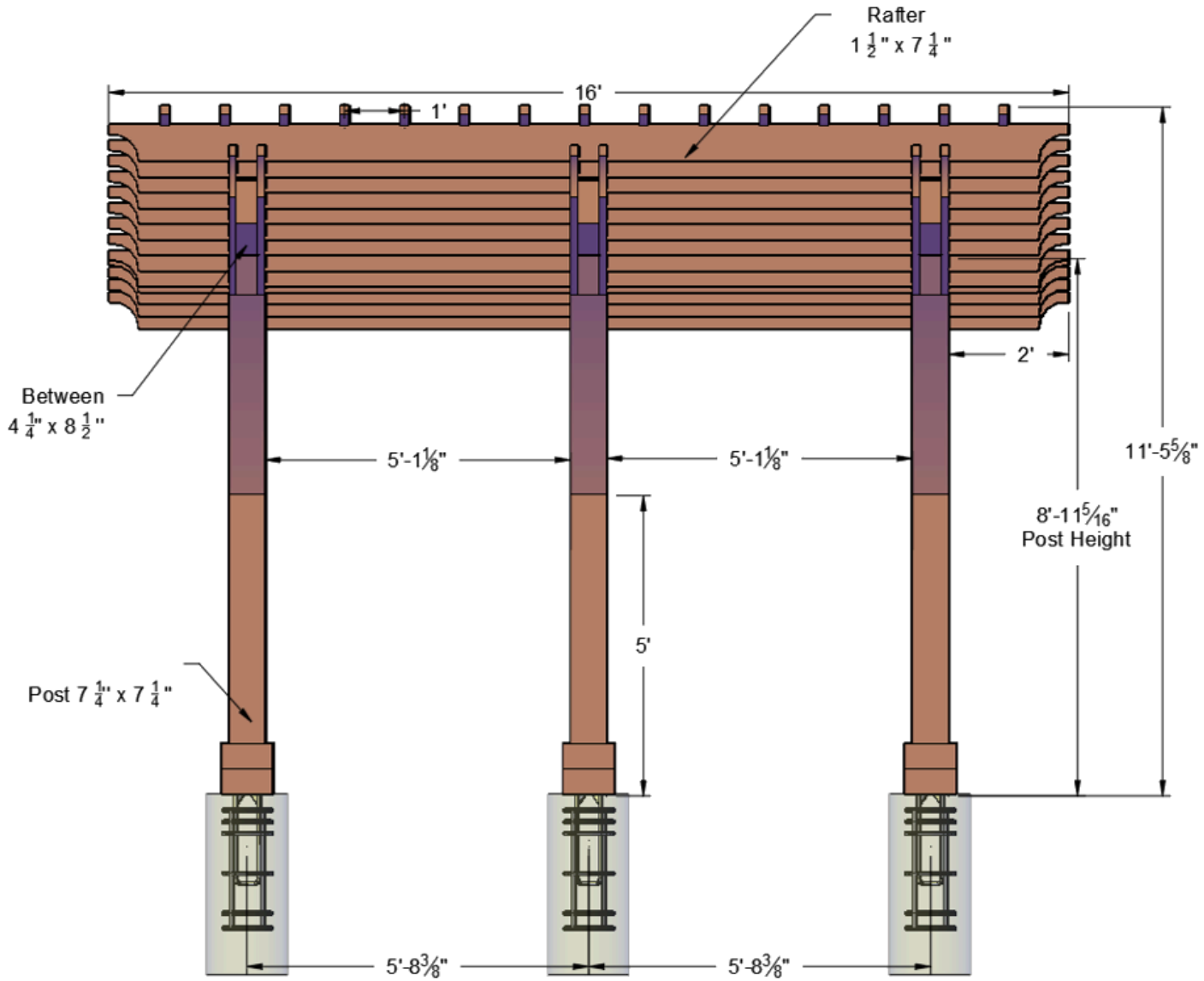
Rafter
1 1/2" x 7 1/4"
16'
1'
2'
Between
4 1/4" x 8 1/2"
5'-1⅛"
5'-1⅛"
11'-5⅝"
8'-11 5/16"
Post Height
5'
Post 7 1/4" x 7 1/4"
5'-8⅜"
5'-8⅜"

SIDE VIEW

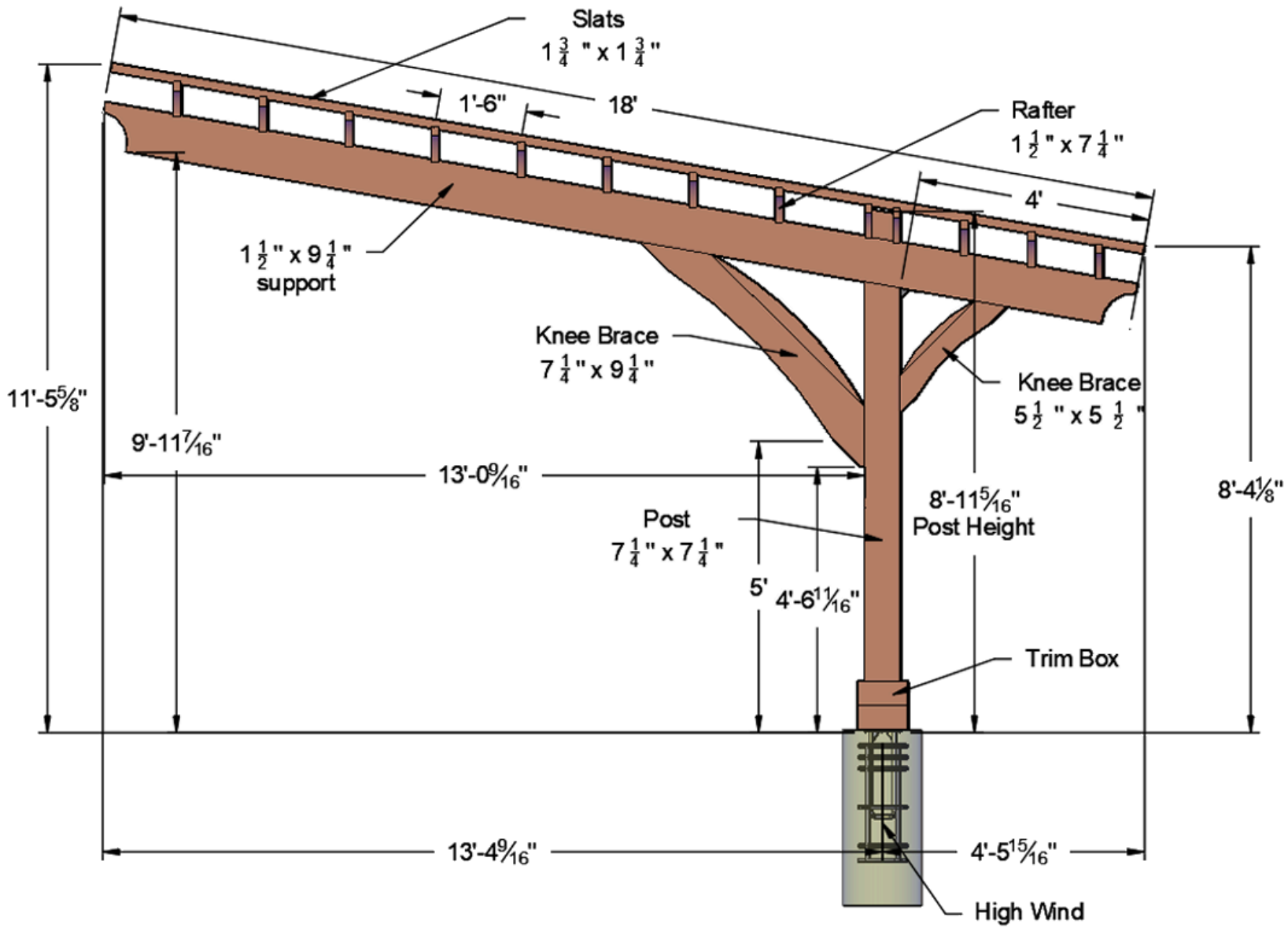
Slats
1¾" x 1¾"
1'-6"
18'
Rafter
1½" x 7¼"
4'
1½" x 9¼"
support
Knee Brace
7¼" x 9¼"
Knee Brace
5½" x 5½"
11'-5⅝"
9'-11⅞"
13'-0⁹⁄₁₆"
8'-11⁵⁄₁₆"
Post Height
8'-4⅛"
Post
7¼" x 7¼"
5'
4'-6¹¹⁄₁₆"
Trim Box
13'-4⁹⁄₁₆"
4'-5¹⁵⁄₁₆"
High Wind

ISOMETRIC VIEW & QR FOR AR EXPERIENCE

