FOREVER REDWOOD

DIMENSIONS & DRAWINGS

Granada Pavilion

The Granada Pavilion has the standard dimensions as follows: lengths from 12' to 60' and widths from 12' to 20'. The length and width are the overall roof measurements. The standard roof overhang is 12". If you need a custom size, we can do it. Just let us know.

Front View 2
Lateral View 3
Front View 4
Lateral View 5

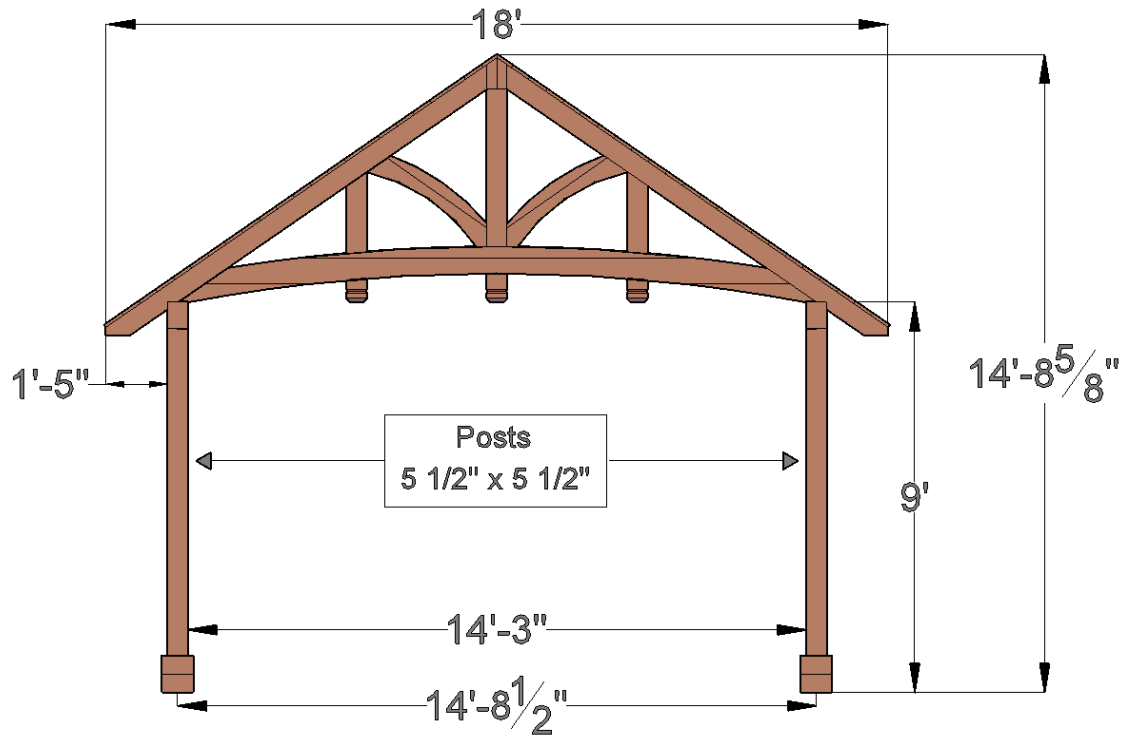

FRONT VIEW

FRONT VIEW

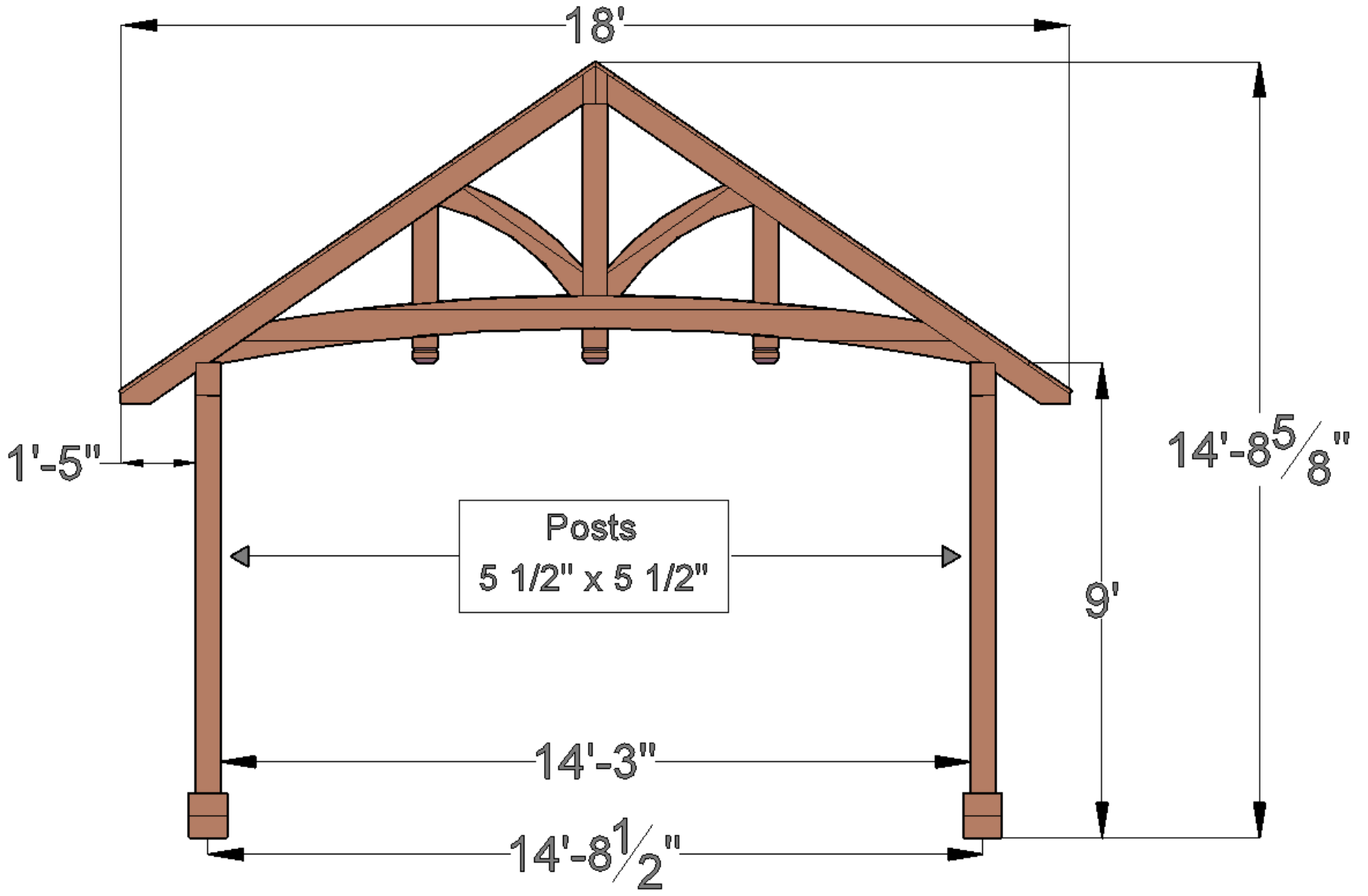

LATERAL VIEW

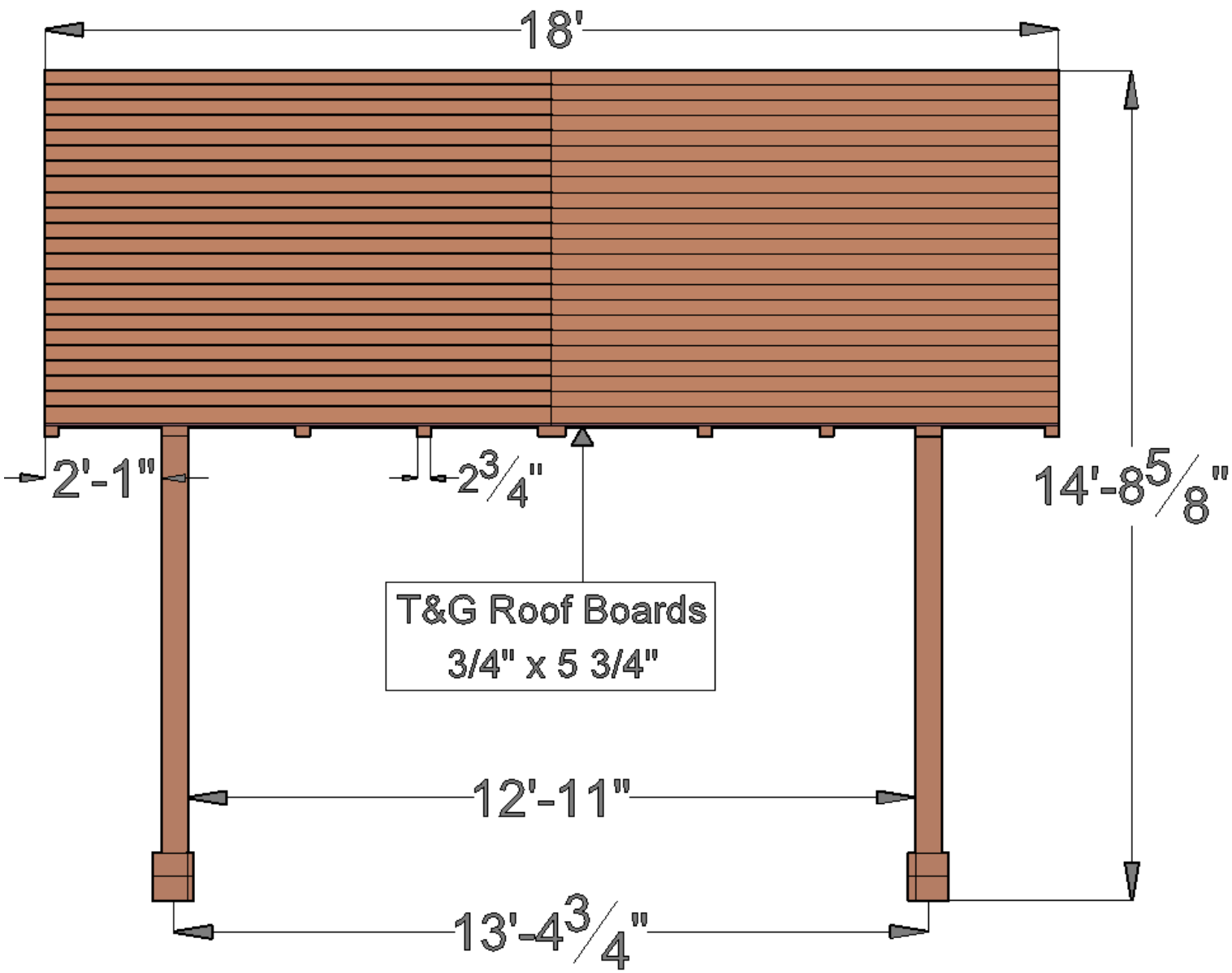

FRONT VIEW

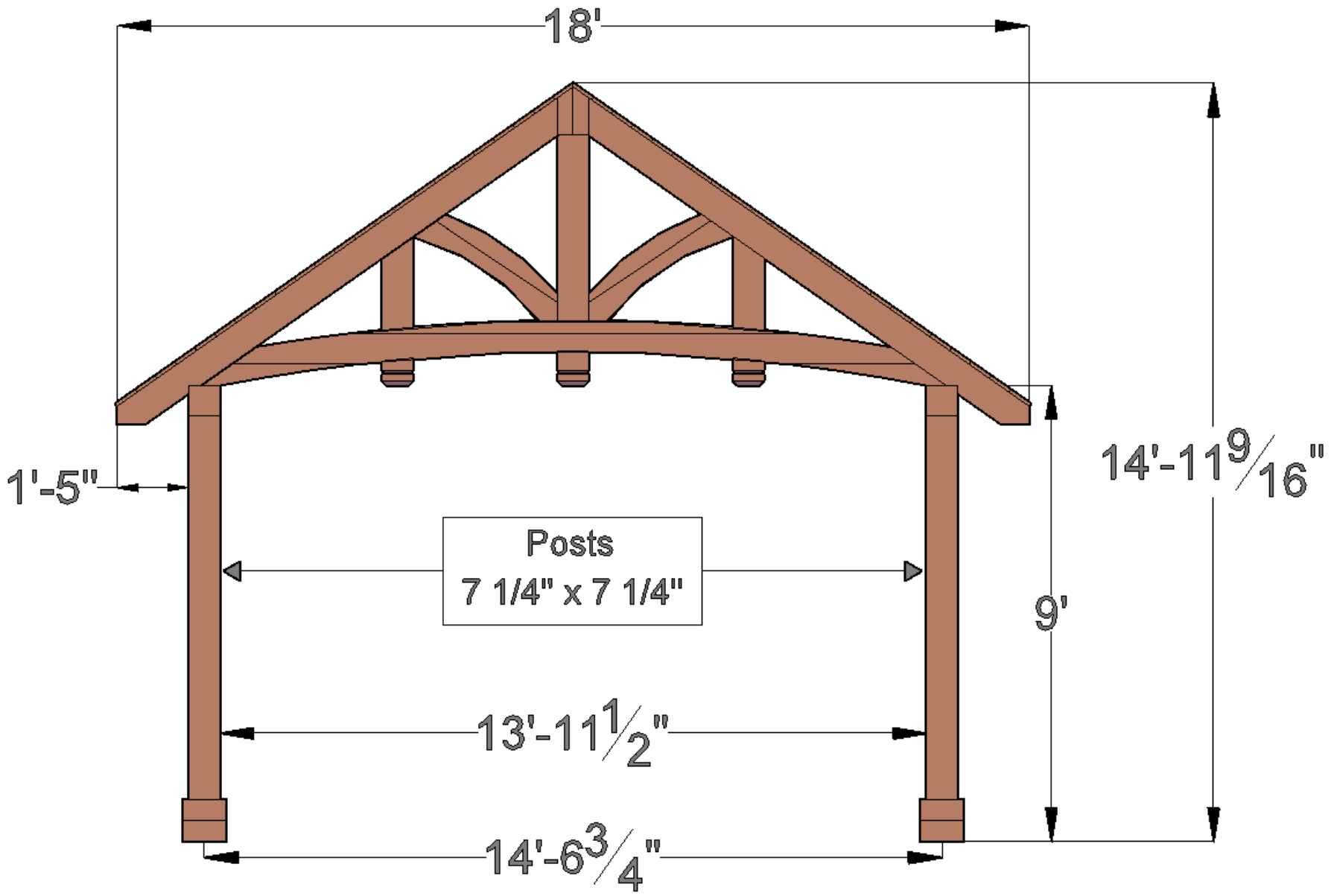

LATERAL VIEW

