FOREVER REDWOOD

DIMENSIONS & DRAWINGS

Humboldt Log Pavilion

The Humboldt Log Pavilion has standard dimensions in lengths from 12' to 60' and widths from 12' to 24'. The length and width are the overall roof measurements. The standard roof overhang is 12". If you need a custom size, we can do it. Just let us know.

Interior View	2
Front View	3
Ladder View	4
Isometric View Schematic	5
Front View Schematic	6
Unions Detail 1	7
Unions Detail 2	8
Isometric View	9
Measurements	10

foreverredwood.com · (866) 332-2403

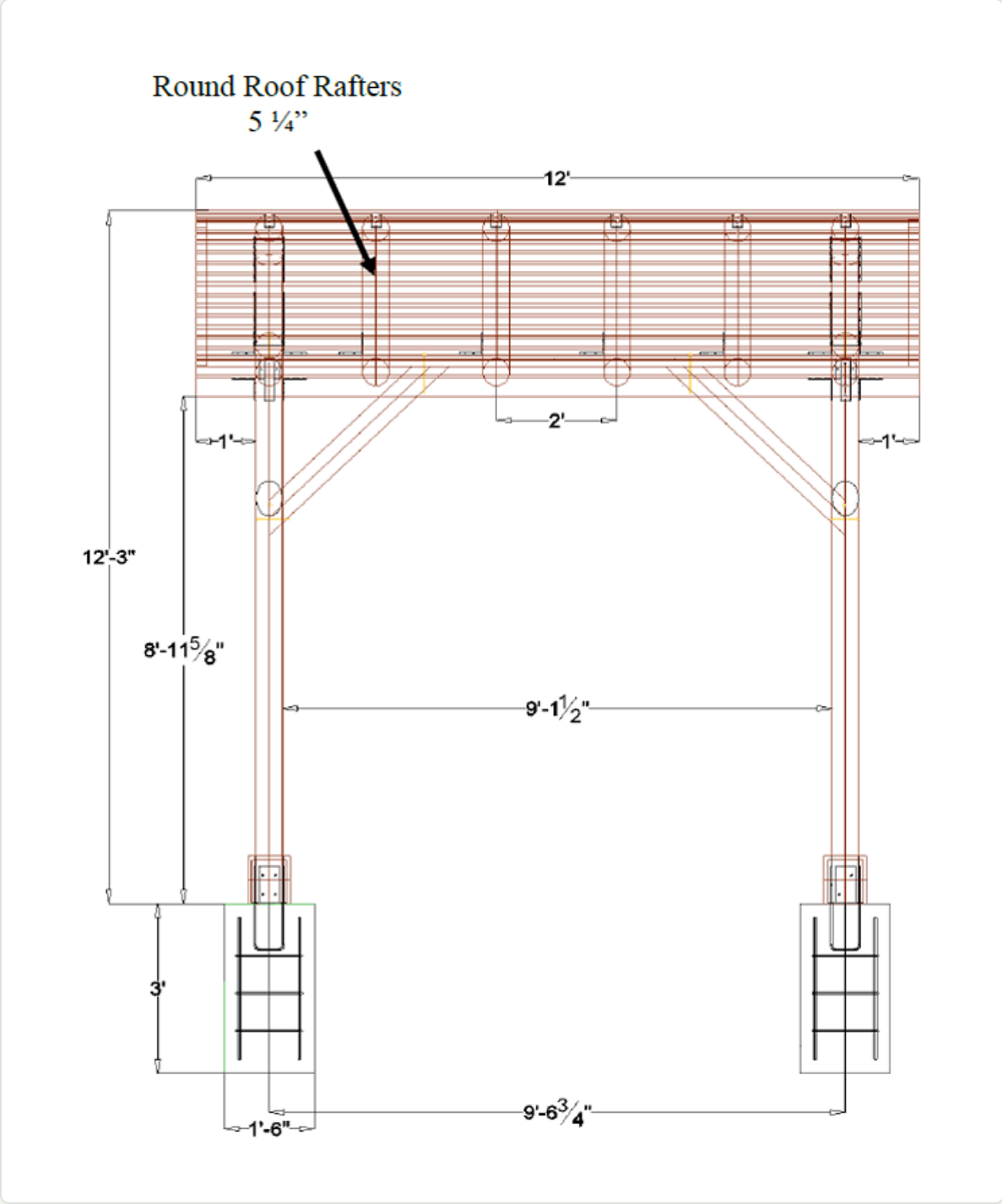

ISOMETRIC VIEW SCHEMATIC

INTERIOR VIEW

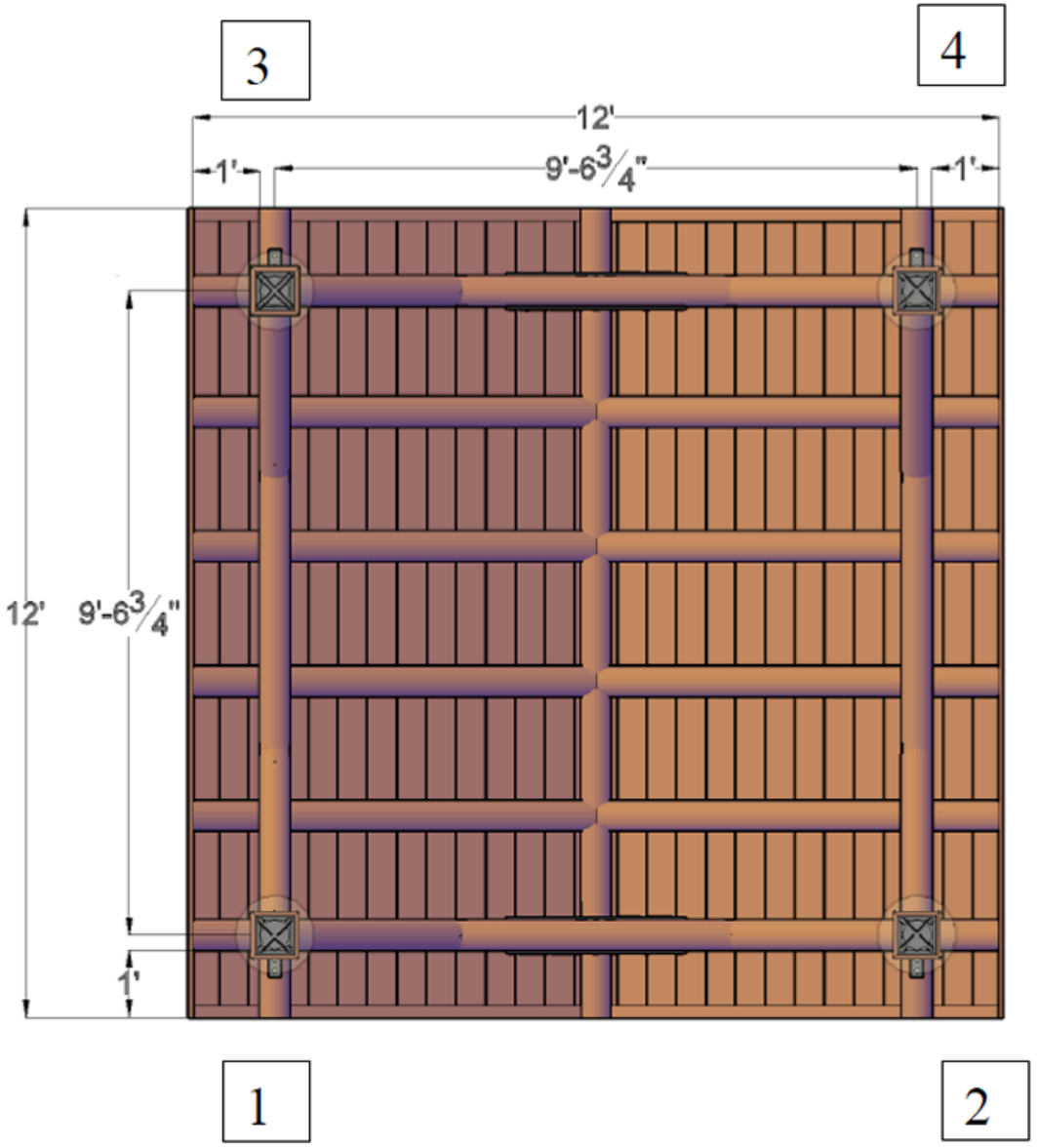

FRONT VIEW

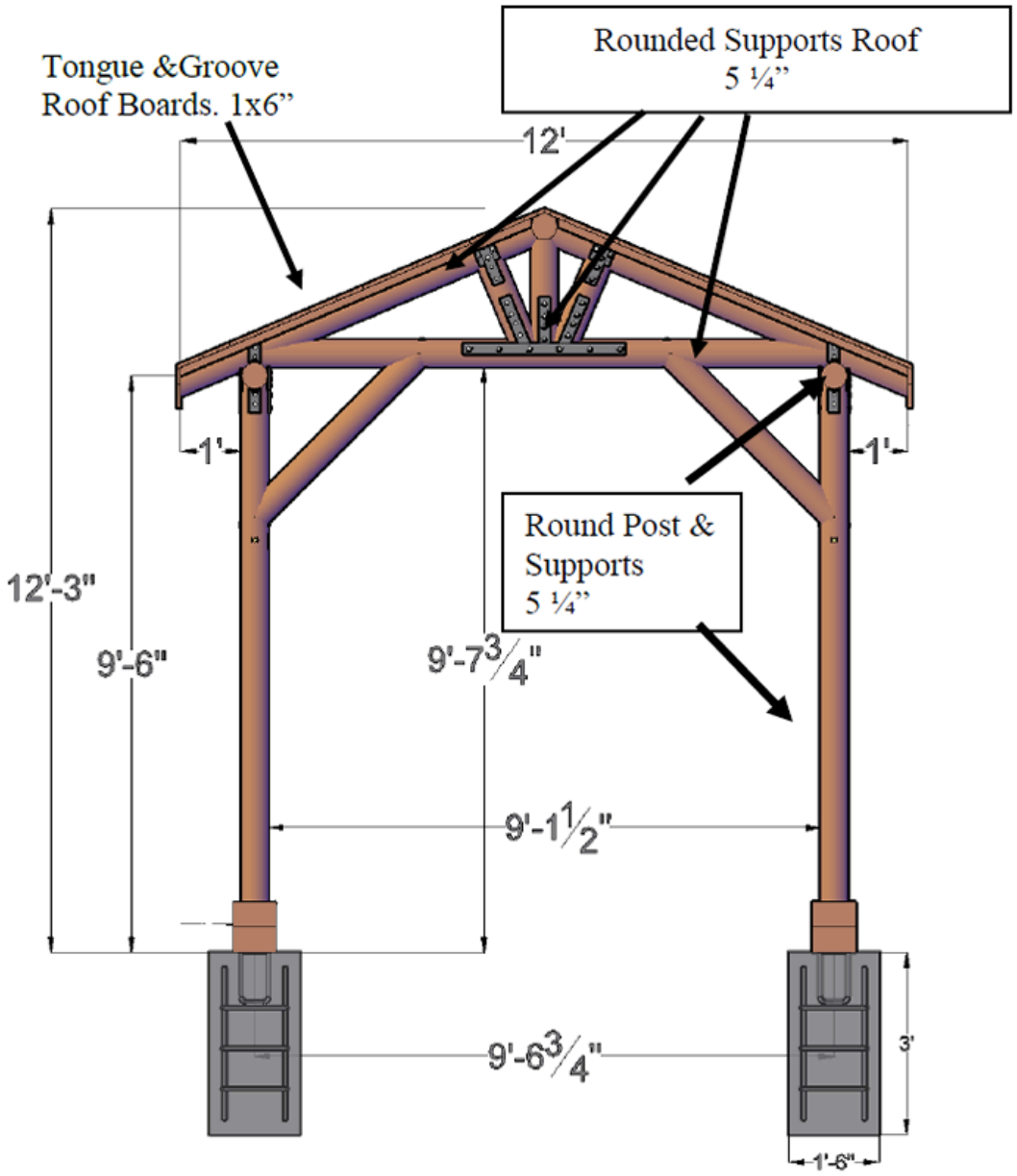
Rounded Supports Roof
5 ¼”
Tongue &Groove
Roof Boards. 1x6”
12'
1'
1'
Round Post &
Supports
5 ¼”
12'-3"
9'-6"
9'-7¾"
9'-1½"
9'-6¾"
3'
1'-6"

LADDER VIEW

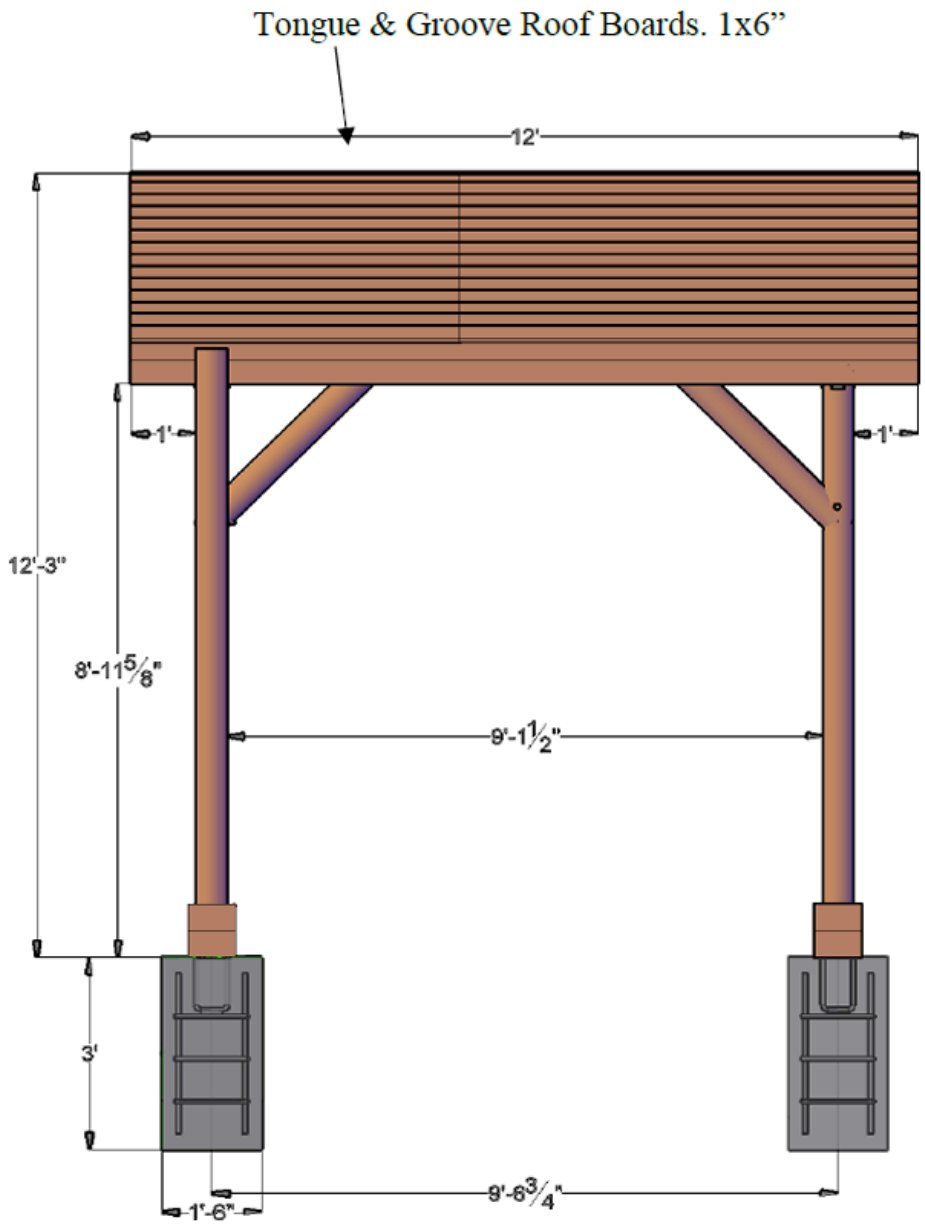

ISOMETRIC VIEW SCHEMATIC

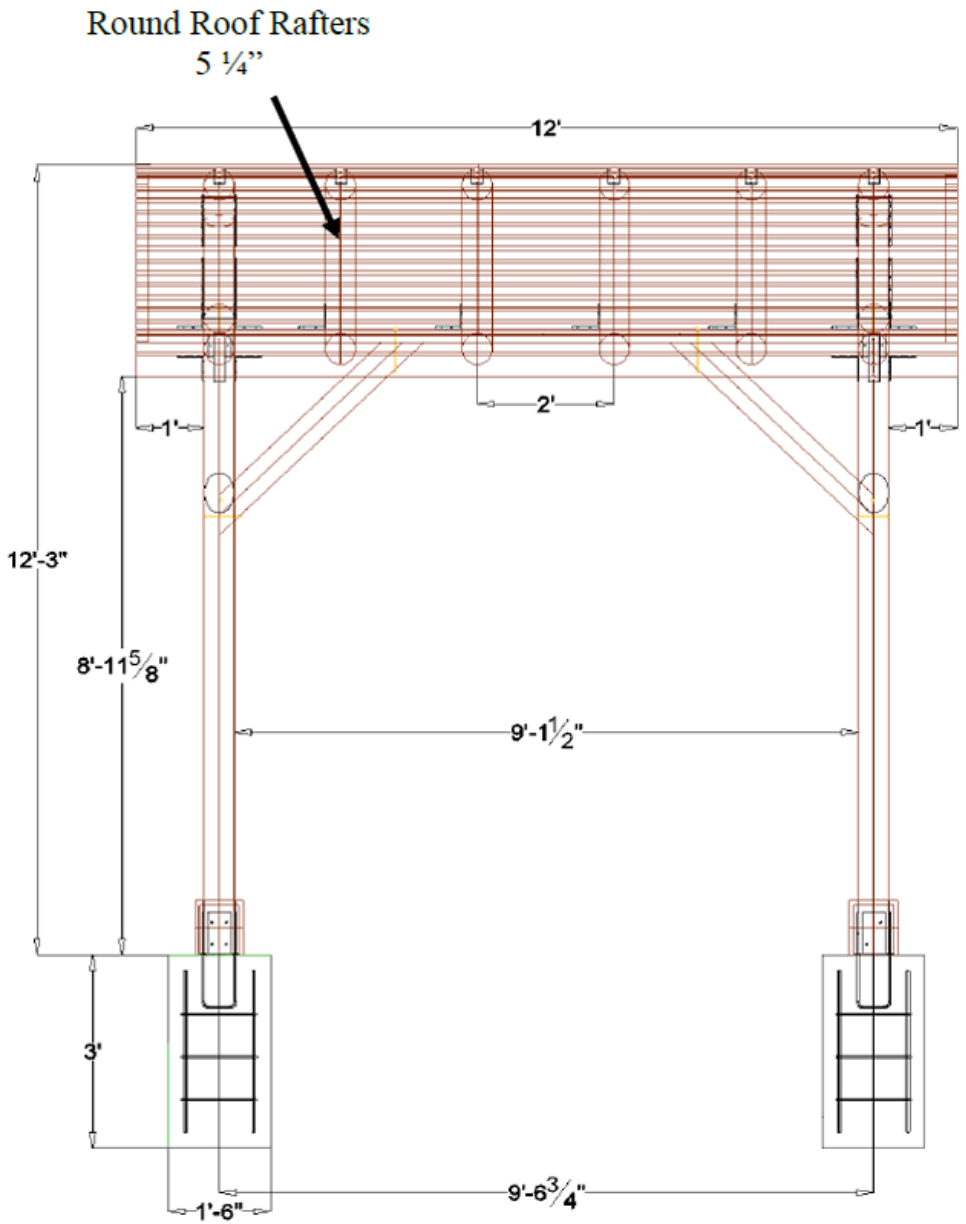

FRONT VIEW SCHEMATIC

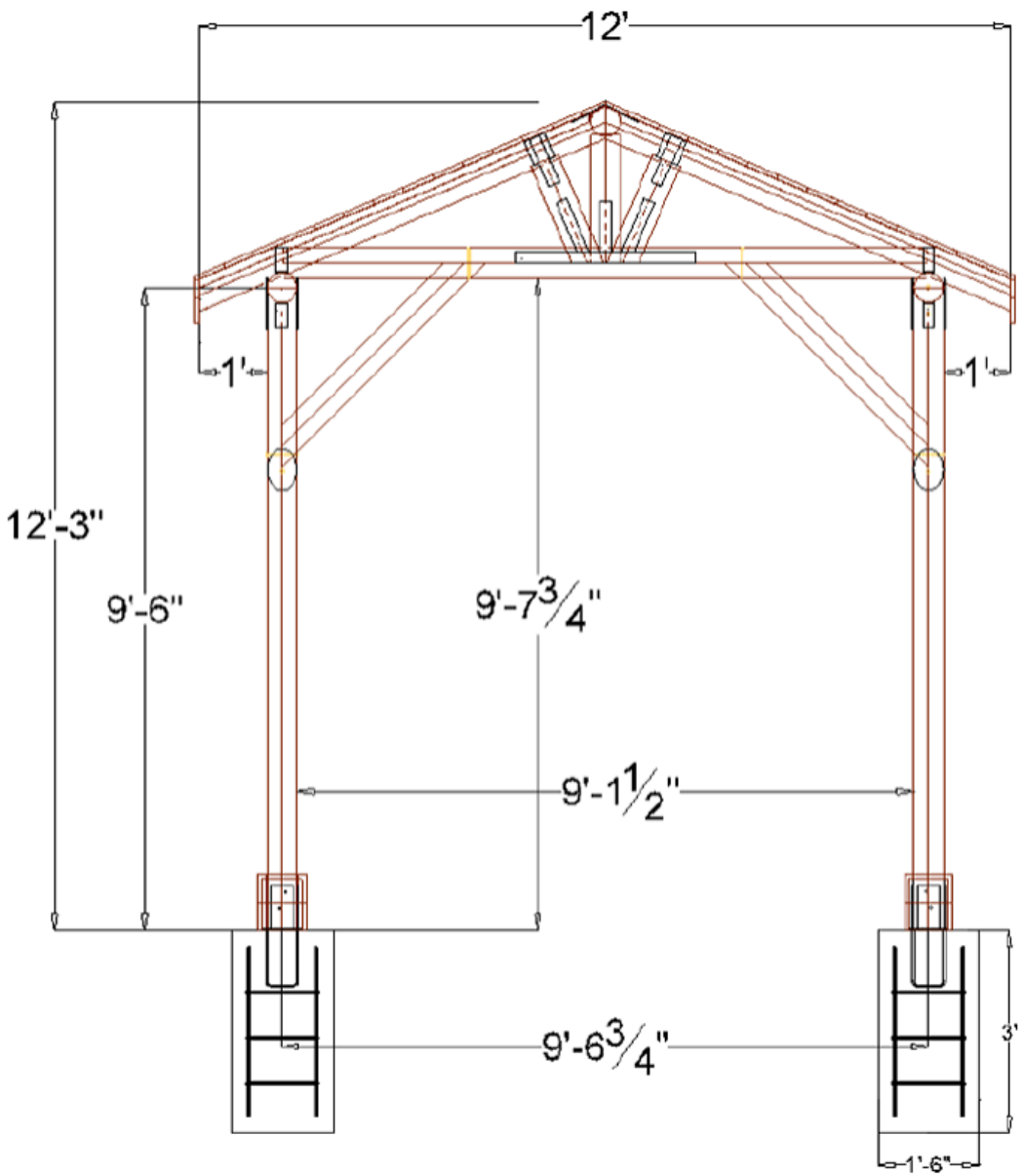

UNIONS DETAIL 1

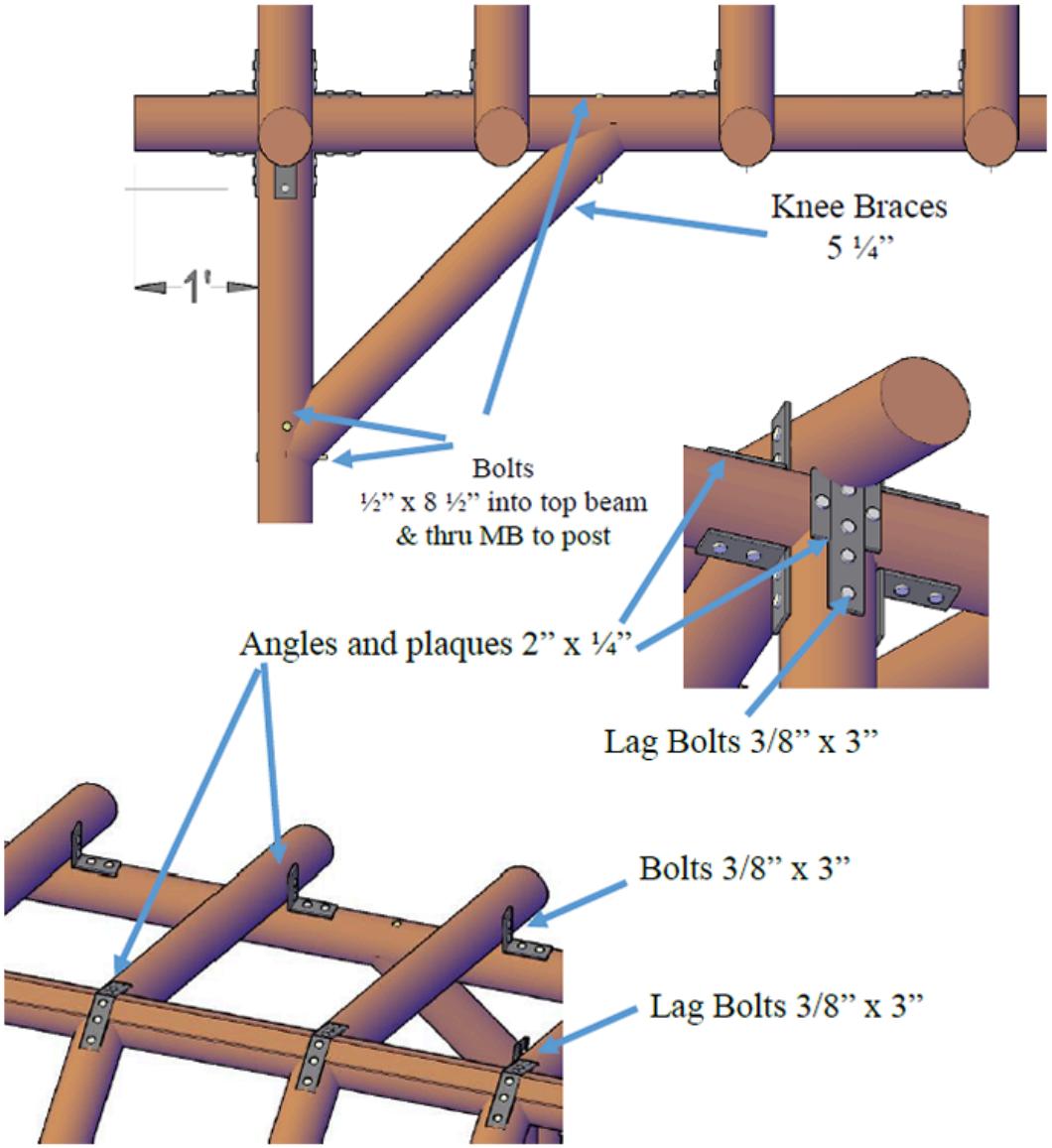

UNIONS DETAIL 2

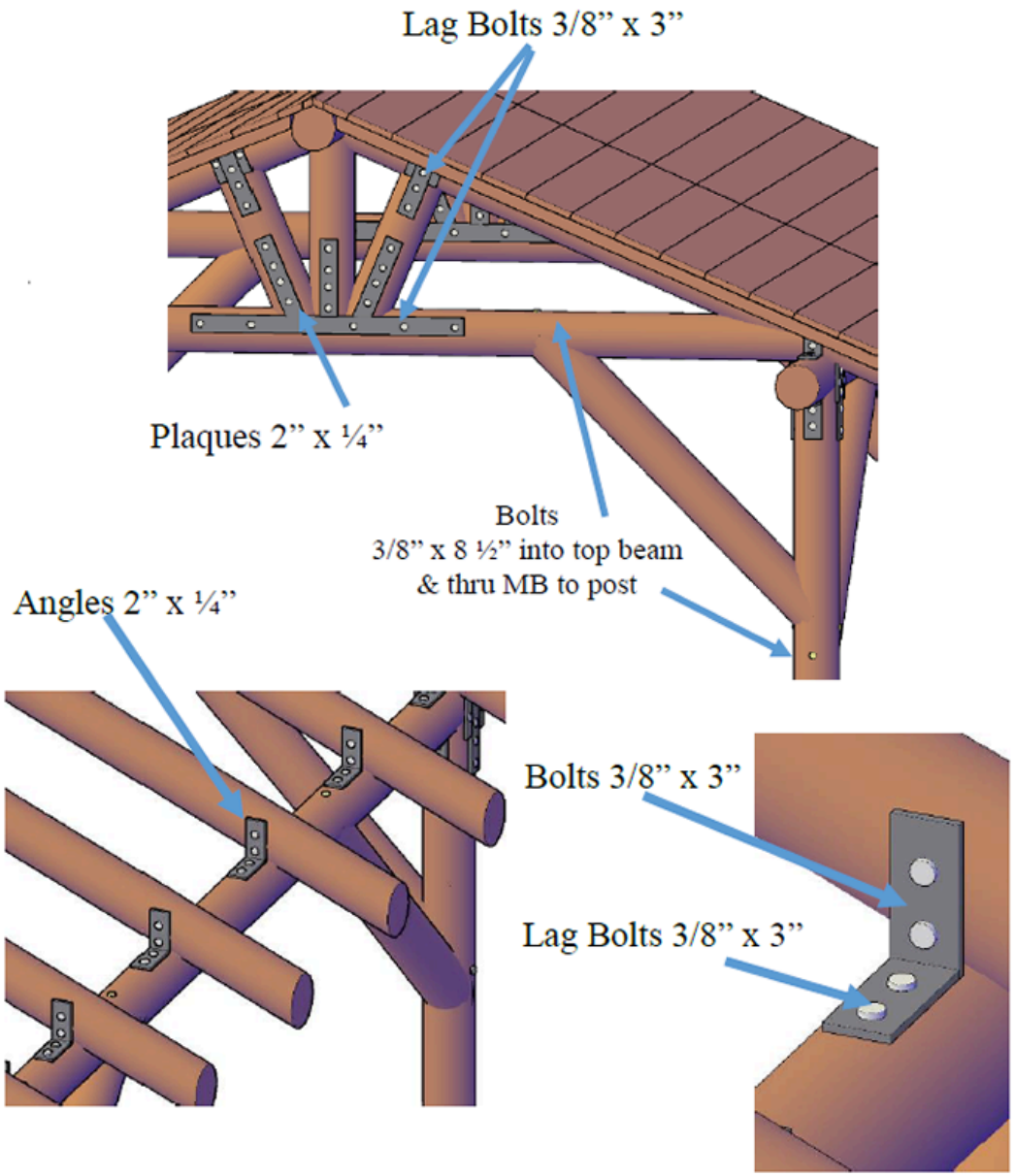

ISOMETRIC VIEW

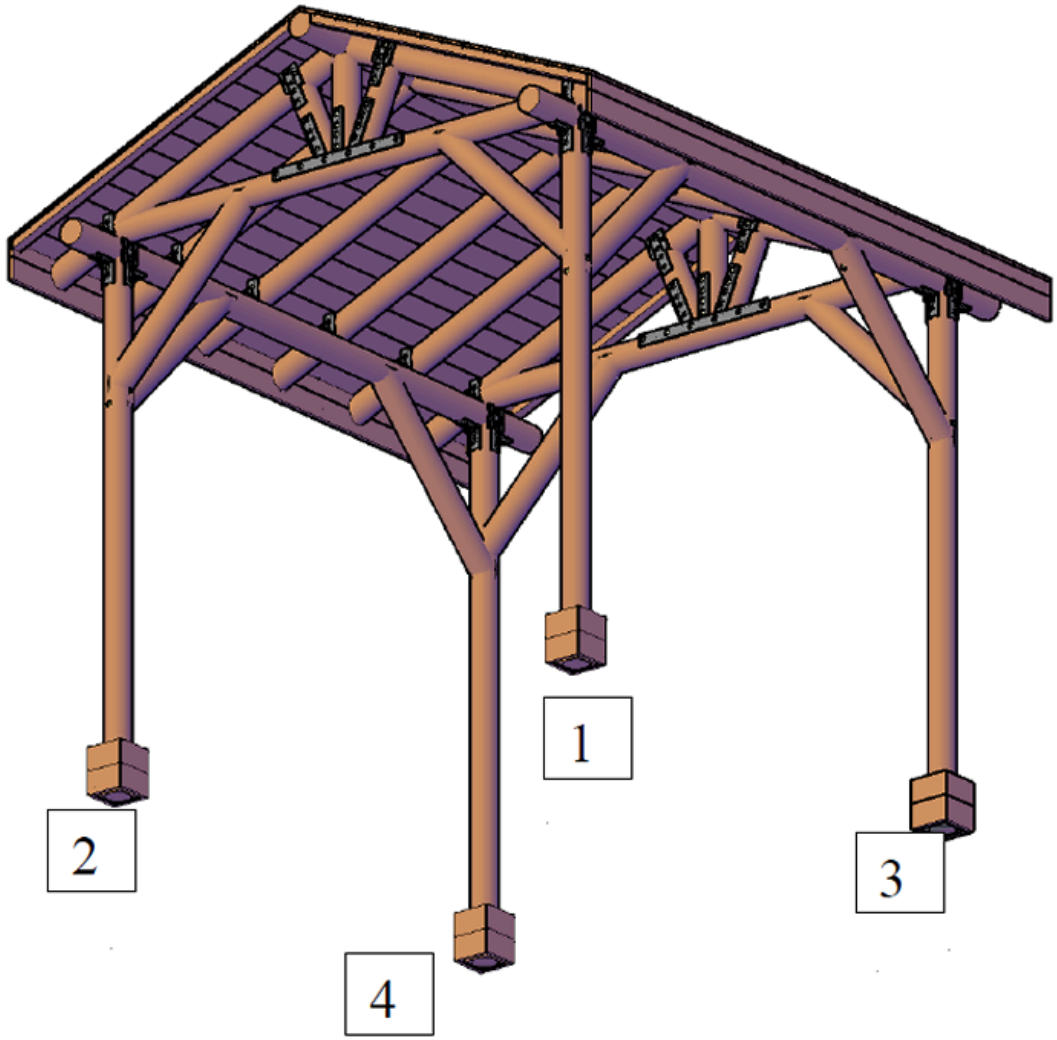

MEASUREMENTS

If you want a strong Post and Support on your Pavilion for the smallest measurements, let us know in the comments box when you place the order or send an email to customer_service@foreverredwood.com