FOREVER REDWOOD

DIMENSIONS & DRAWINGS

Solar Pergola

When we receive any Pergola order, we will provide you with a detailed set of drawings based on the options and sizes chosen. The drawings will clearly show each detail and dimension from 4 different angles. The drawings are an excellent tool to quickly double check each detail, making sure everything is exactly as you'd like before we begin to build. Initial drawings are emailed within 5 business days, and we'll revise your drawings as needed to make sure all details and sizing issues are perfected prior to beginning construction. Let us know the specifications of your panels and the amount of panels you are planning for and your assigned designer can lay them out and size your structure as needed.

Front View - Length	2
Side View - Width	3
Top View	4
Isometric View	5
Top View	6
Support View (Pergola Length)	7
Rafter View (Pergola Width)	8
The Solar Pergola Pitch Specs.	9
Isometric View	10



ISOMETRIC VIEW

FRONT VIEW - LENGTH

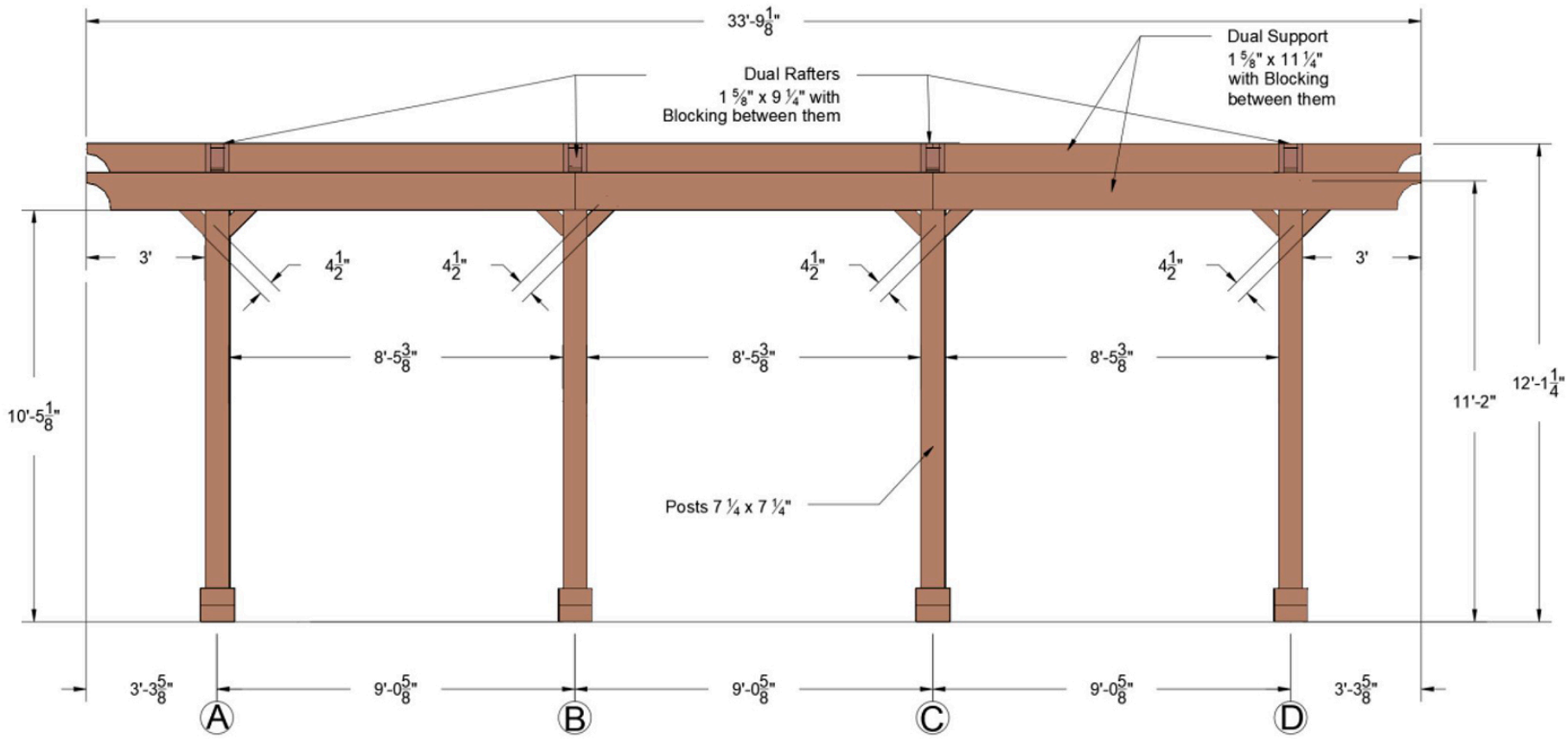

SIDE VIEW - WIDTH

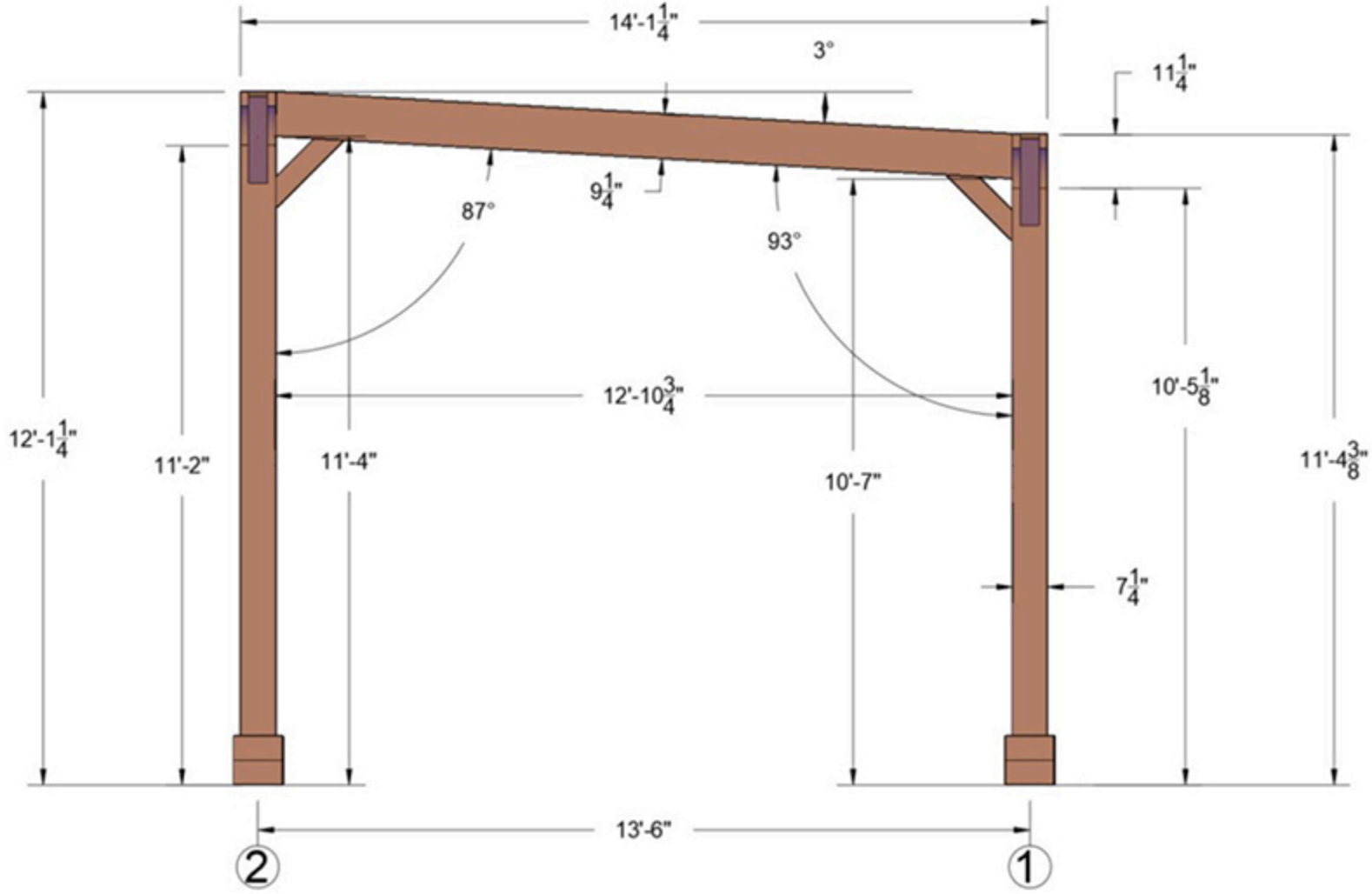

TOP VIEW

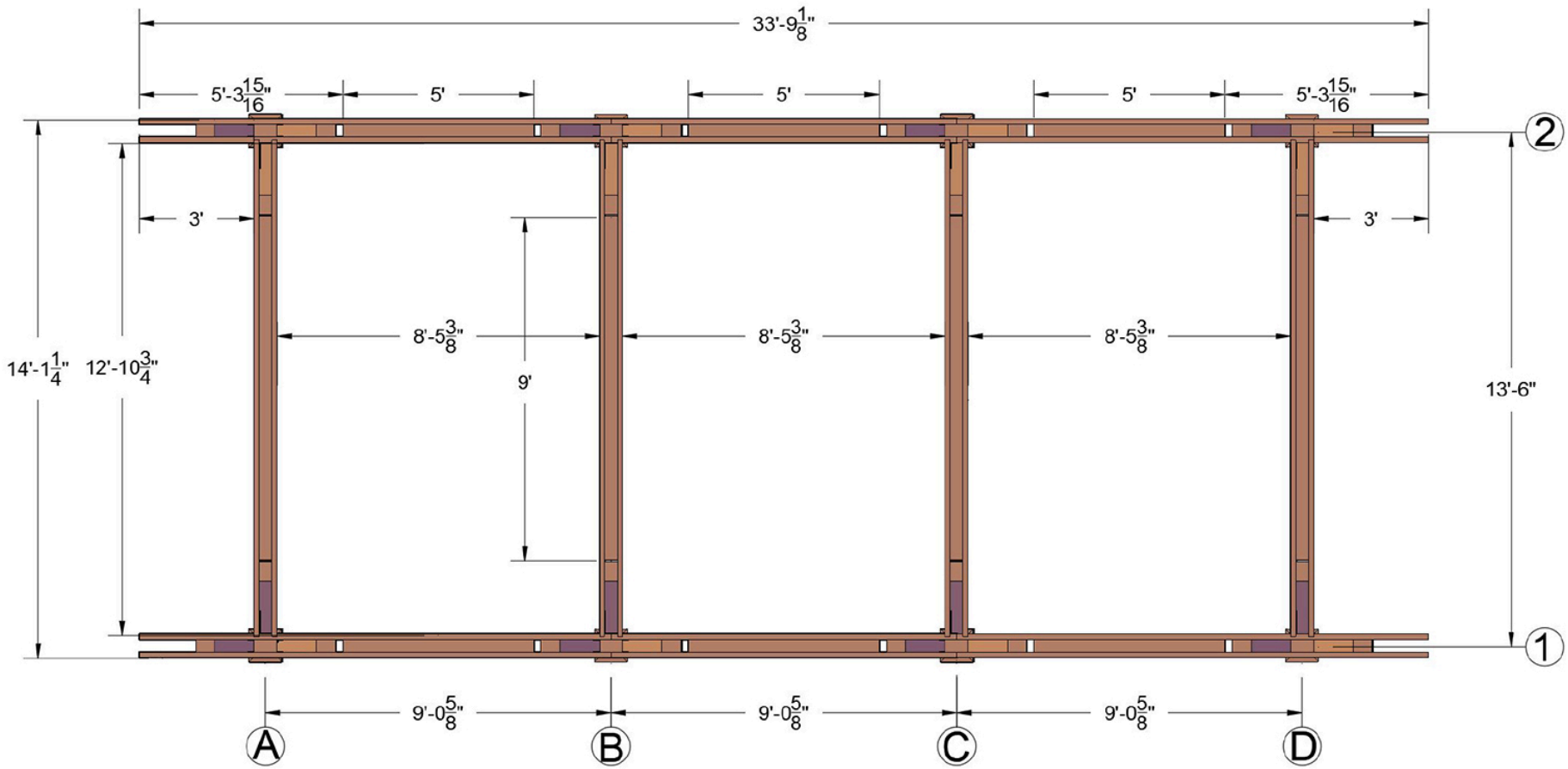
33'-9 1/8"
5'-3 15/16"
5'
5'
5'
5'-3 15/16"
3'
3'
8'-5 3/8"
8'-5 3/8"
8'-5 3/8"
14'-1 1/4"
12'-10 3/4"
9'
13'-6"
2
1
9'-0 5/8"
9'-0 5/8"
9'-0 5/8"
A
B
C
D

ISOMETRIC VIEW



TOP VIEW

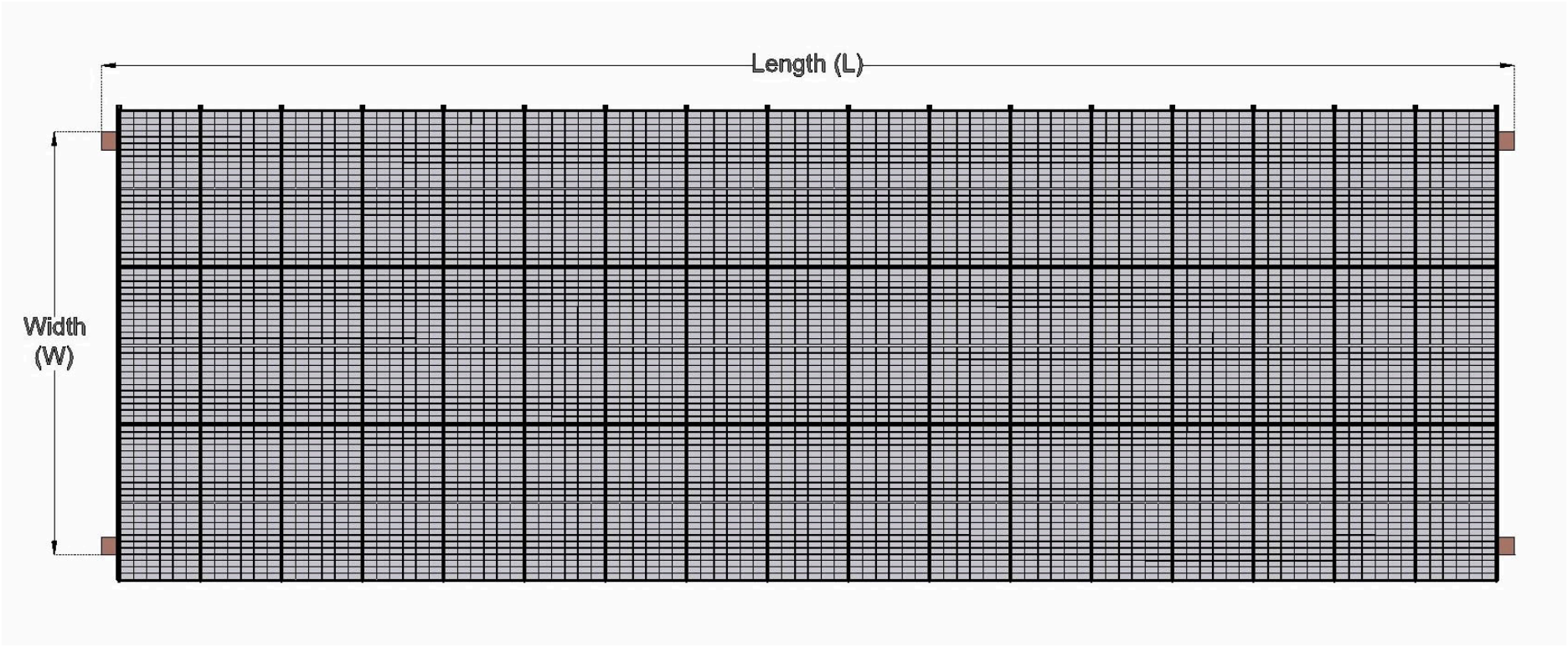

SUPPORT VIEW (PERGOLA LENGTH)

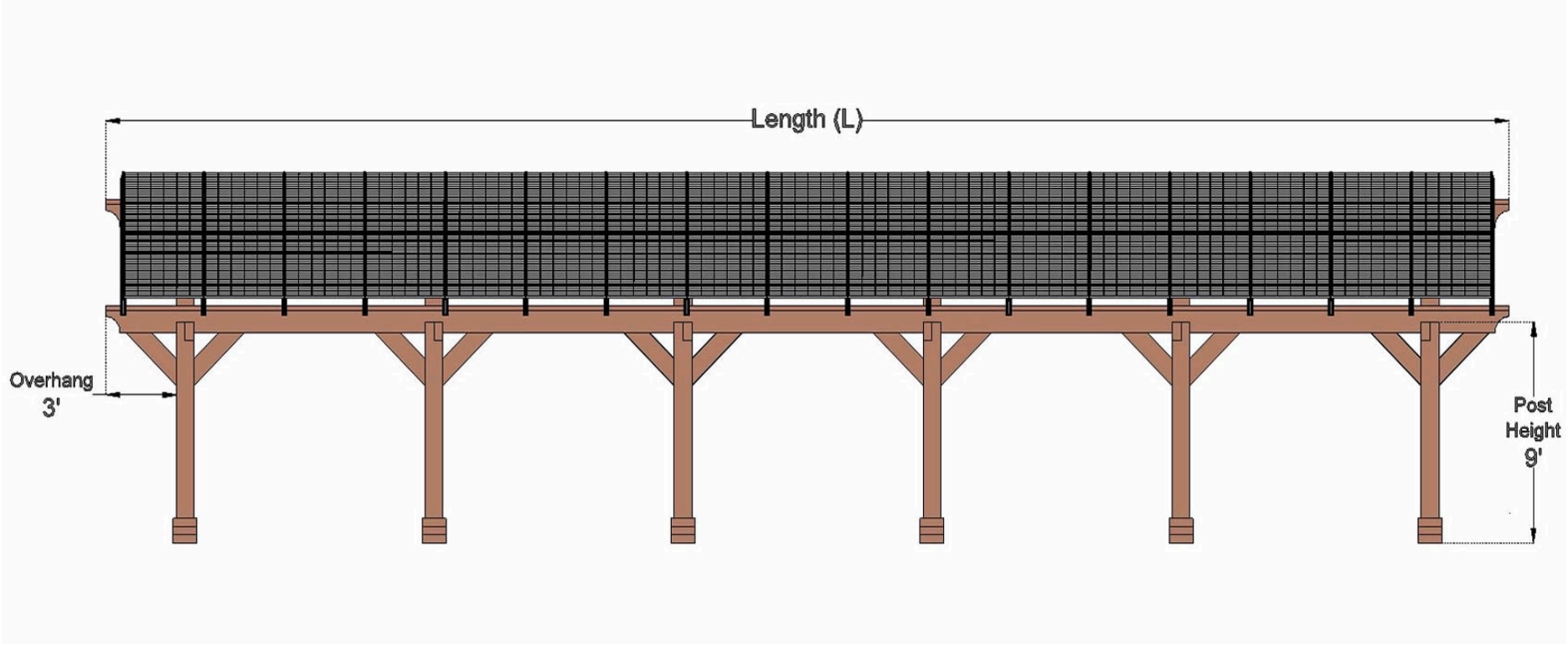

RAFTER VIEW (PERGOLA WIDTH)

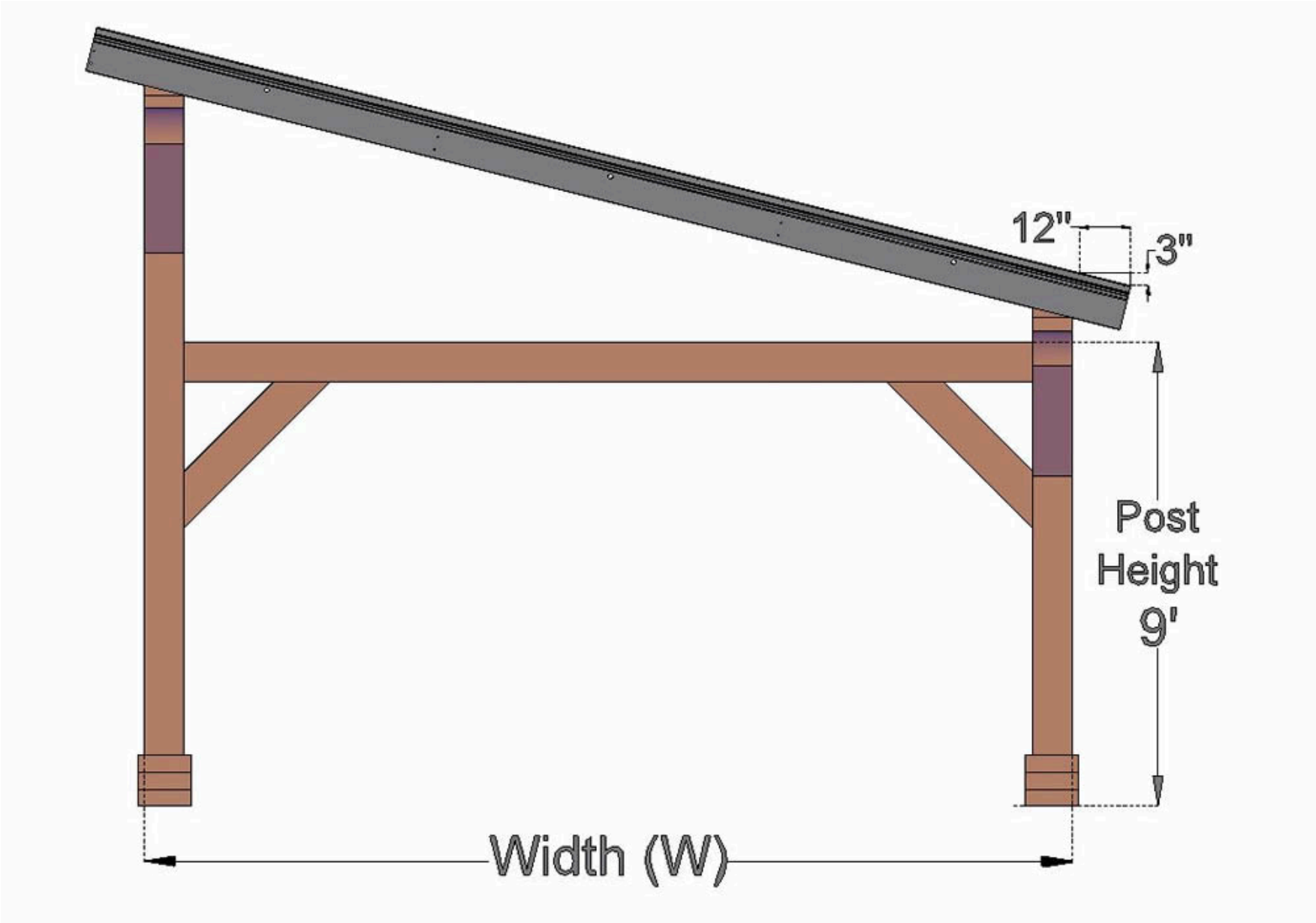

THE SOLAR PERGOLA PITCH SPECS.

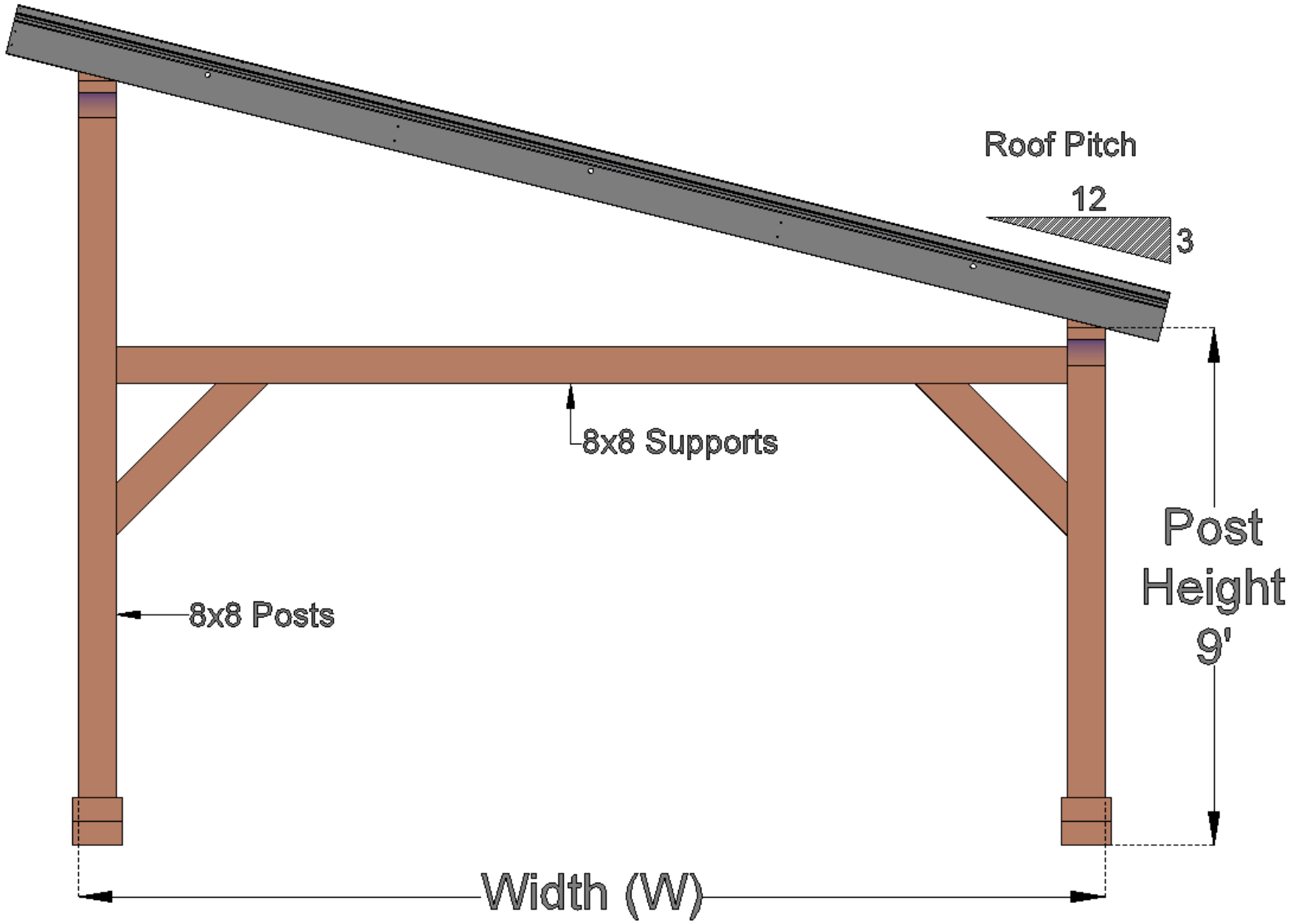

ISOMETRIC VIEW

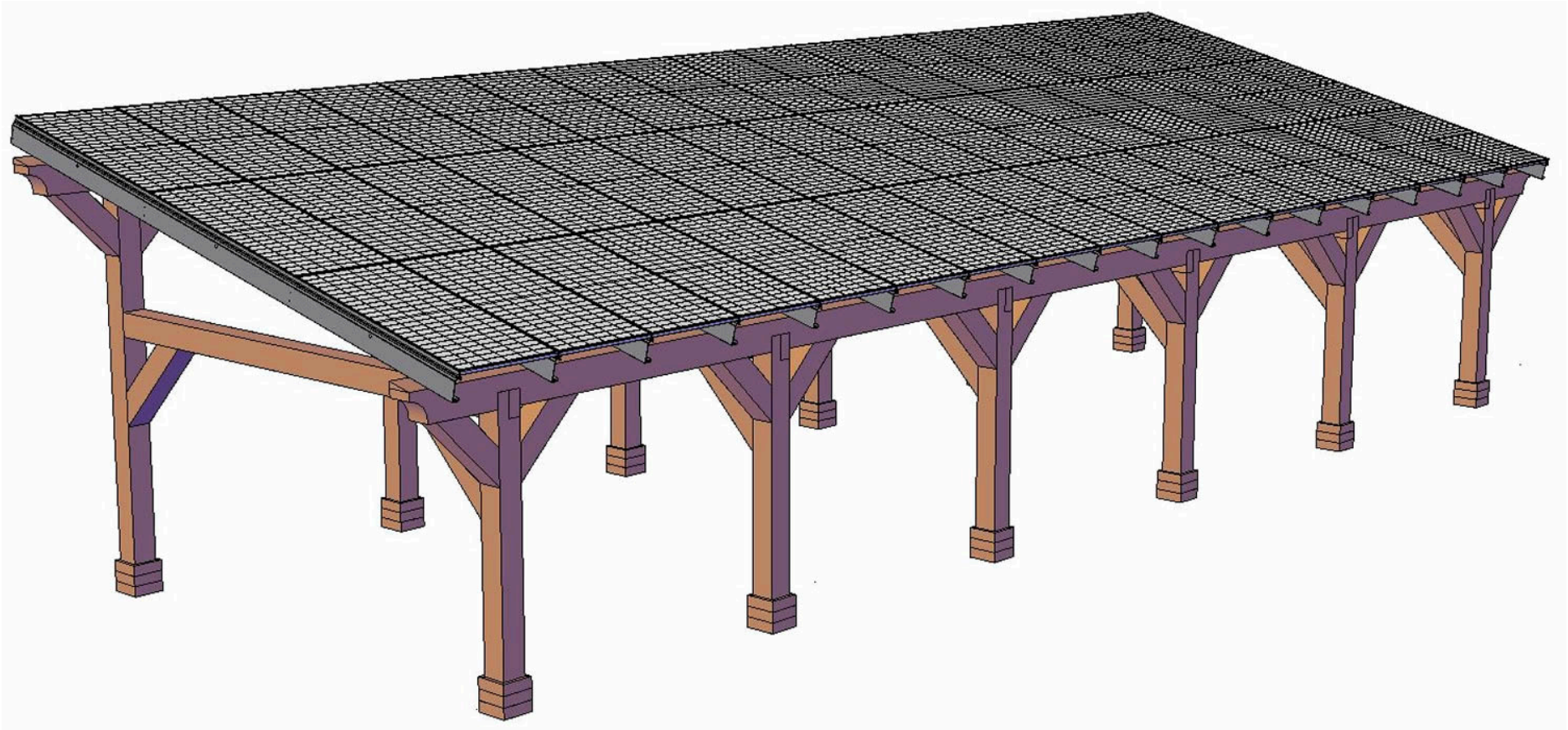

MEASUREMENTS

Forever Redwood Pergola kits are completely assembled in the shop prior to shipping to be certain everything fits together perfectly. All timbers are notched into one another to increase structural strength and to lock all of the pergolas timbers in place so they will never sag, twist or move. There are hundreds of notches in the larger pergolas. Full notching is rarely practiced because it is labor intensive, but it is one of the secrets to a long lasting and beautiful pergola.

All assembly hardware is included and is stainless steel.