FOREVER REDWOOD

DIMENSIONS & DRAWINGS

Sunset Patio Pavilion

The Sunset Patio Pavilions are available in lengths from 8' to 60' and widths from 8' to 24'. The length and width are the overall roof measurements. The standard roof overhang is 12".

Isometric View	2
Top View	3
Isometrical View - Length & Width labels.	4
Length View	5
Width View	6
Drawing 6	7
Measurements	8

foreverredwood.com · (866) 332-2403

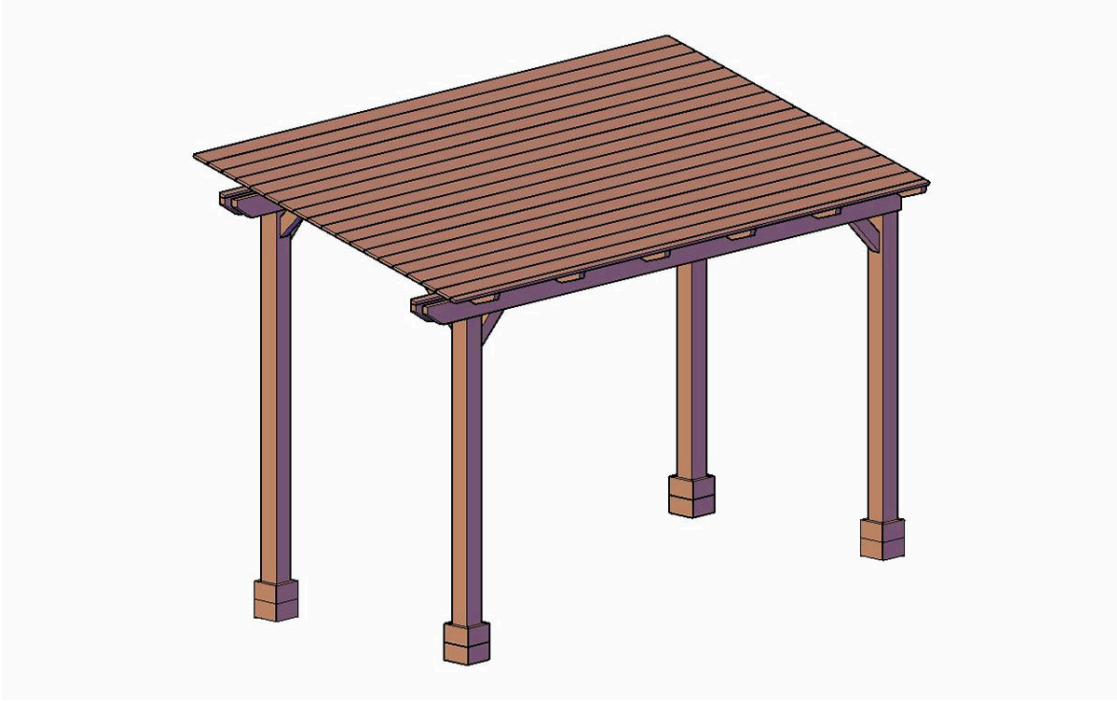

ISOMETRIC VIEW

ISOMETRIC VIEW

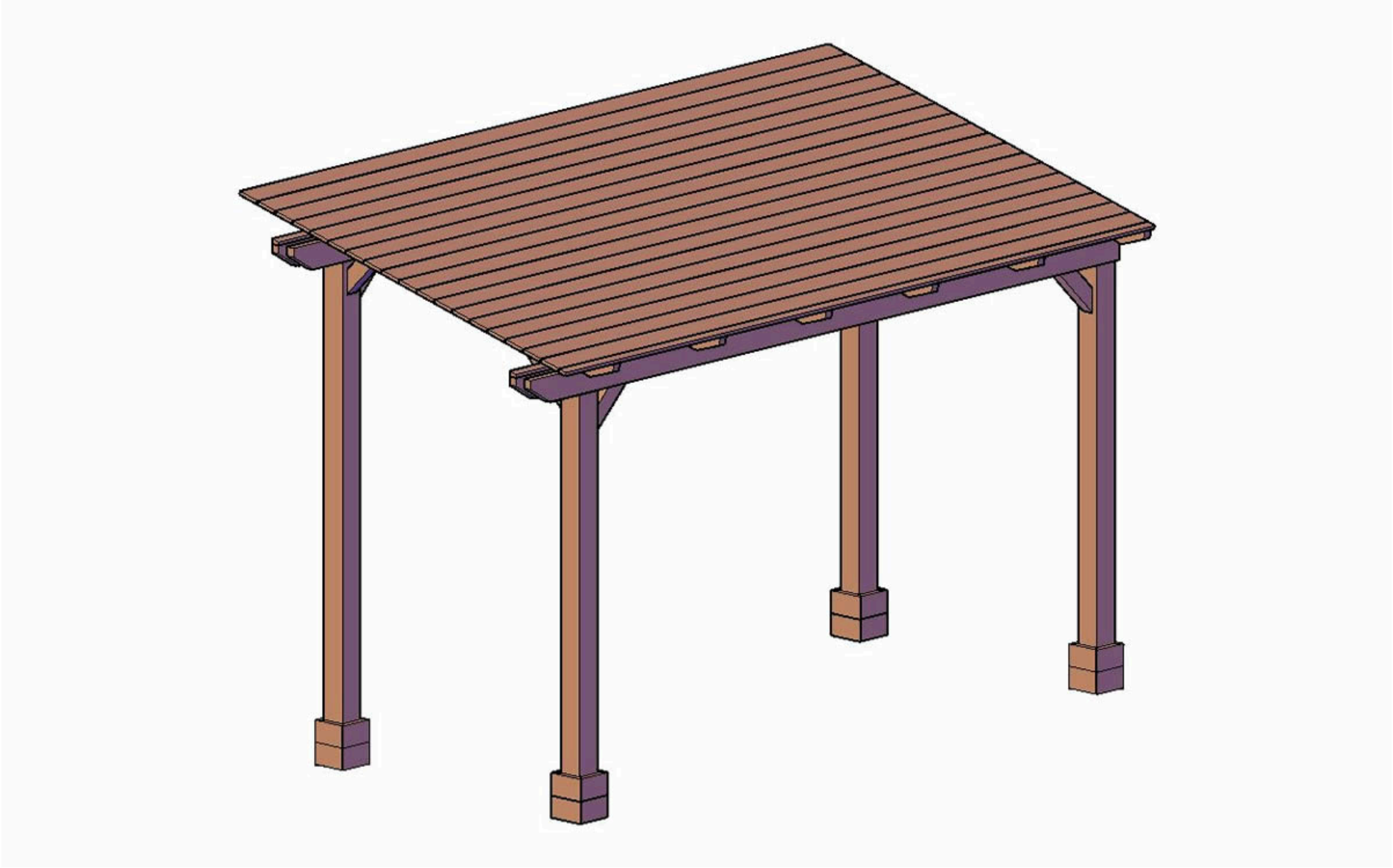

TOP VIEW

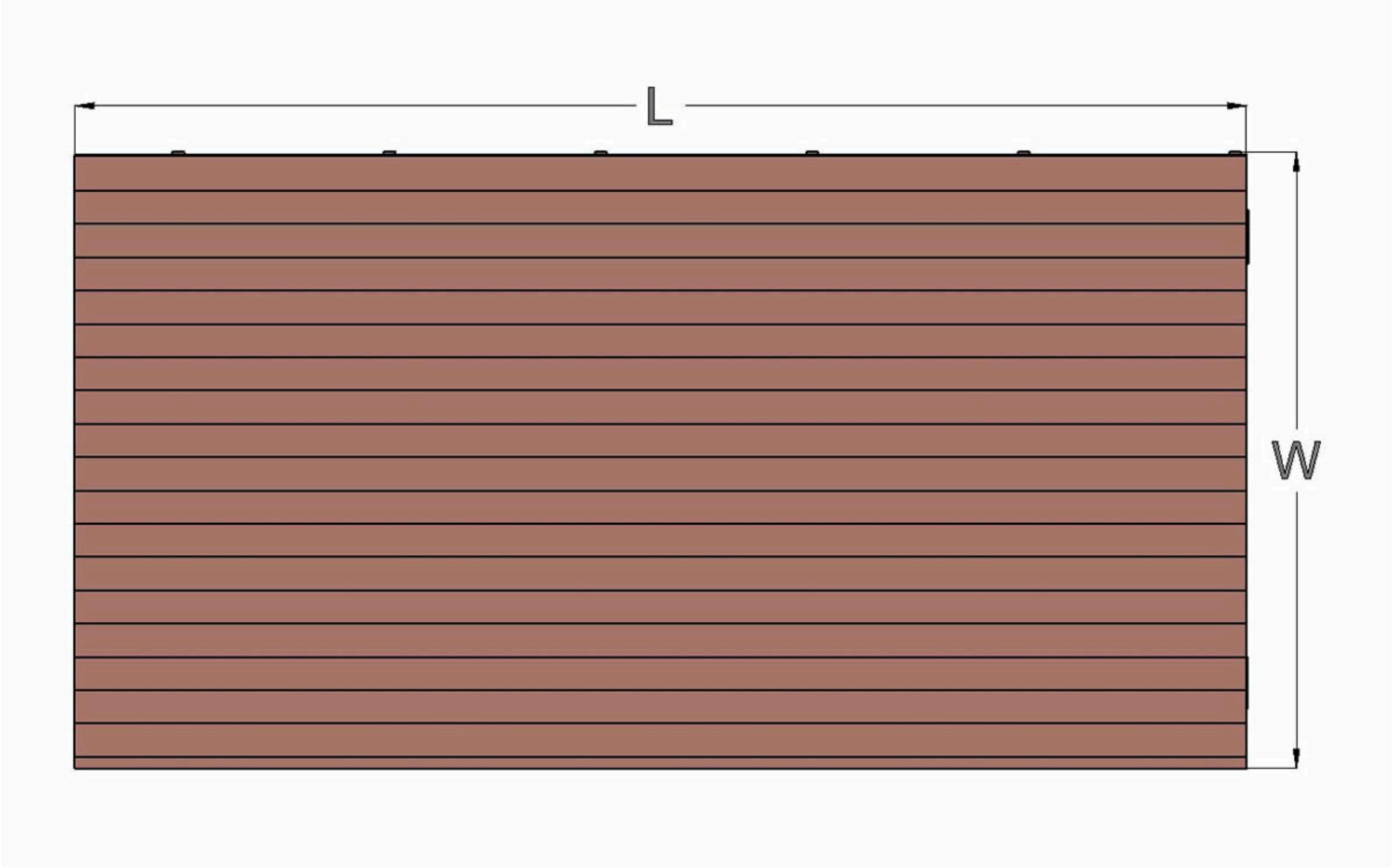

ISOMETRICAL VIEW - LENGTH & WIDTH LABELS.

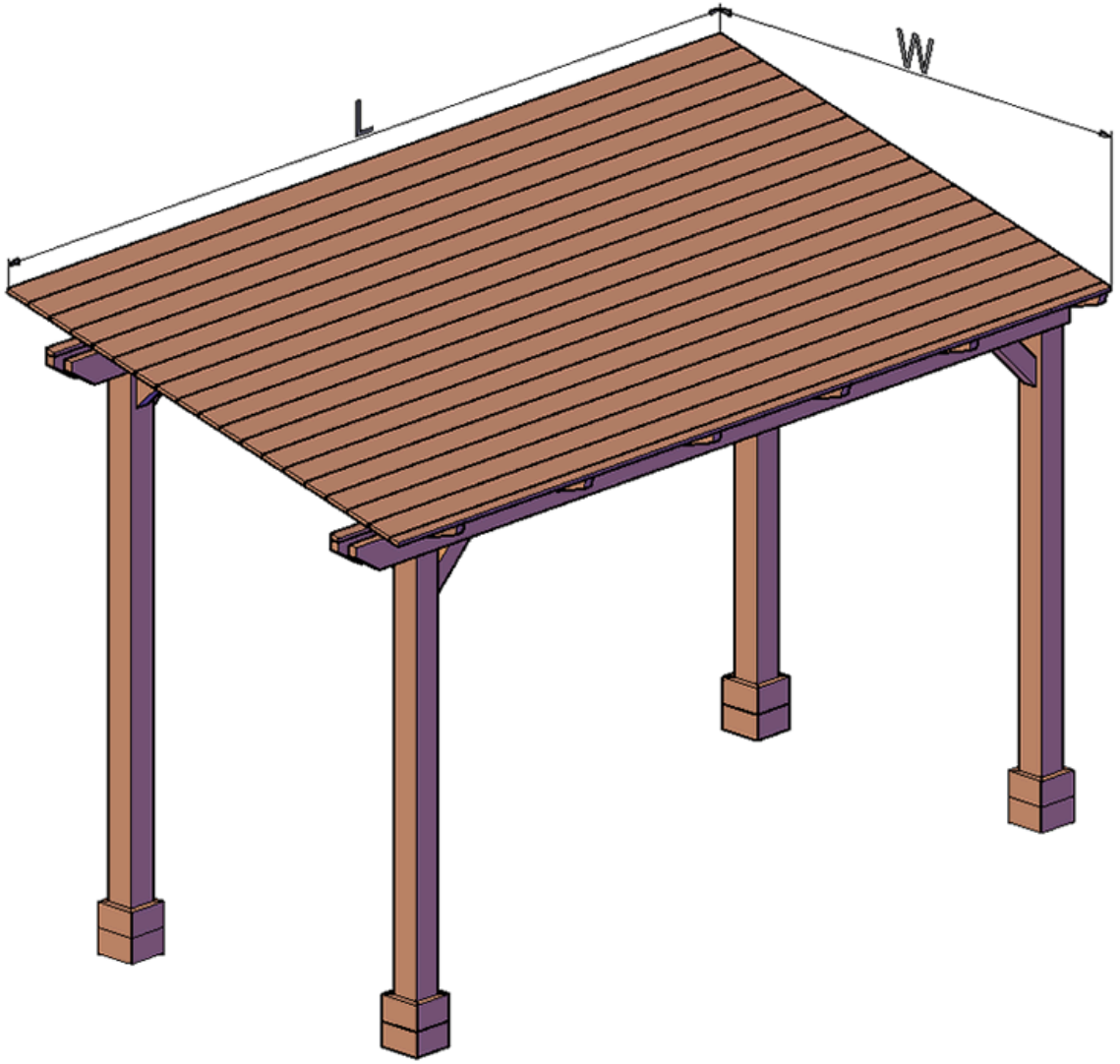

LENGTH VIEW

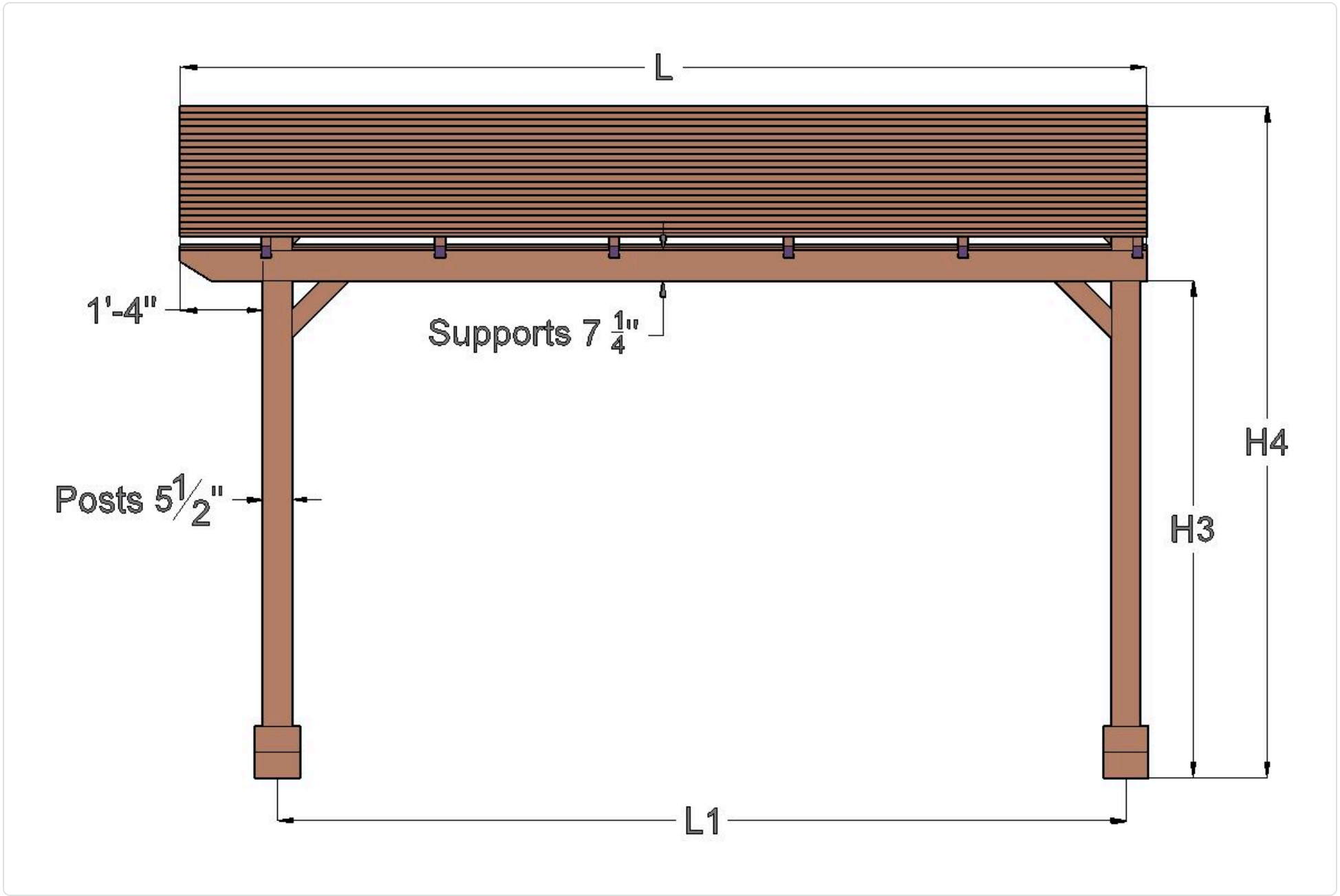

WIDTH VIEW

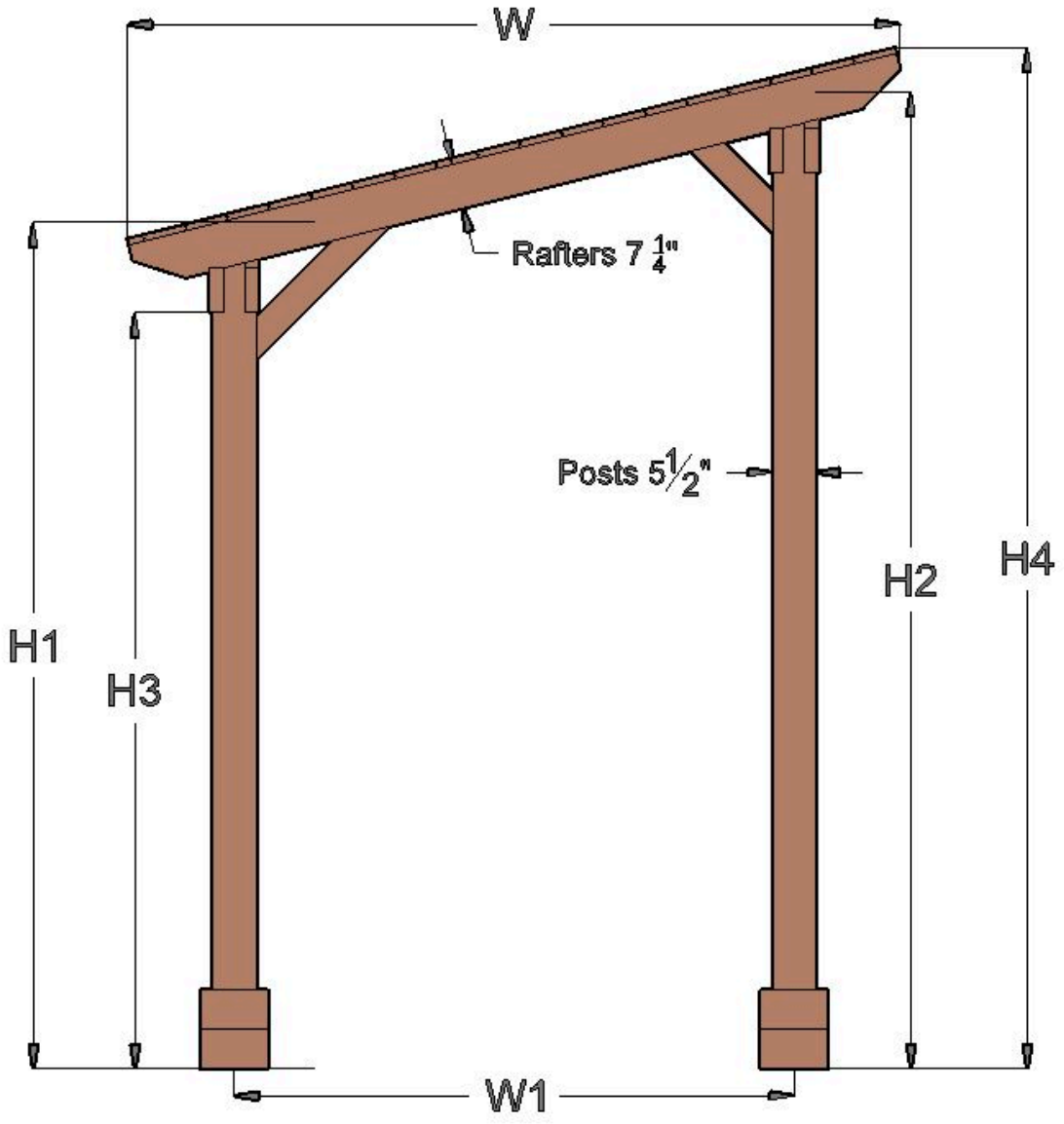

DRAWING 6

For additional long-term structural strength, we add solid timber blocking in-between the dual support timbers as shown in the drawing below. With this blocking, the dual supports are in effect converted into one solid 7 1/4 inch x 6 1/2 inch timber as shown below:

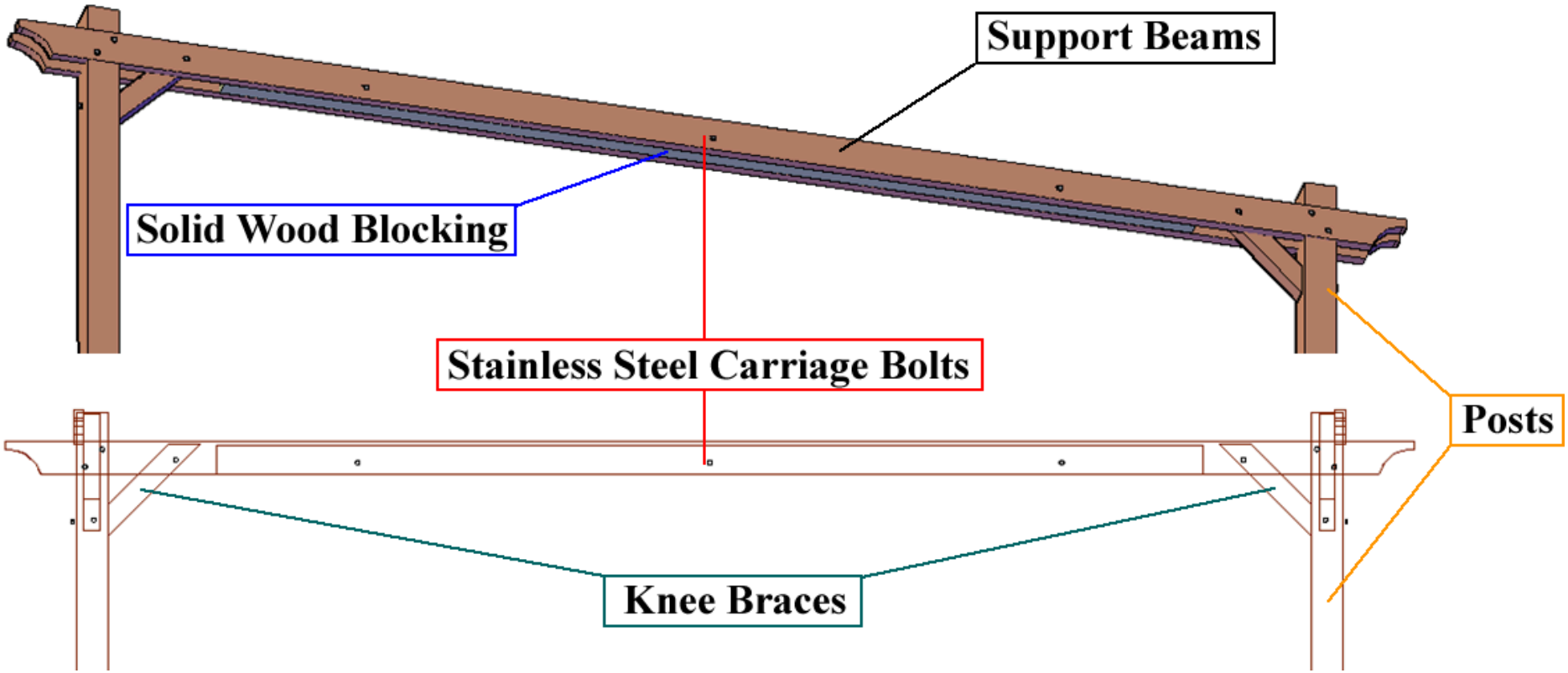

MEASUREMENTS

THE SUNSET PATIO PAVILION SPECIFICATIONS TABLE			
H1 - Front Posts (ft)	**H2 - Back Posts (ft)**	**H3 (ft) - Front Posts, height from floor up to support**	**H4 (ft) - Back Posts, height from floor up to roof**
8.5	9.9	7.42	10.36
9	10.4	7.92	10.86
9.5	10.9	8.42	11.36
10	11.4	8.92	11.86
10.5	11.9	9.42	12.36
11	12.4	9.92	12.86
11.5	12.9	10.42	13.36
12	13.4	10.92	13.86