FOREVER REDWOOD

DIMENSIONS & DRAWINGS

Sunset Porch Pavilion

The Sunset Porch Pavilions are available in lengths from 8' to 60' and widths from 8' to 24'. The length and width are the overall roof measurements. The standard roof overhang is 12".

Top View	2
Length View	3
Width View	4
Isometric View	5
Top View	6
Length View	7
Width View	8
Isometric View	9
Drawing 9	10
Measurements	11

foreverredwood.com · (866) 332-2403

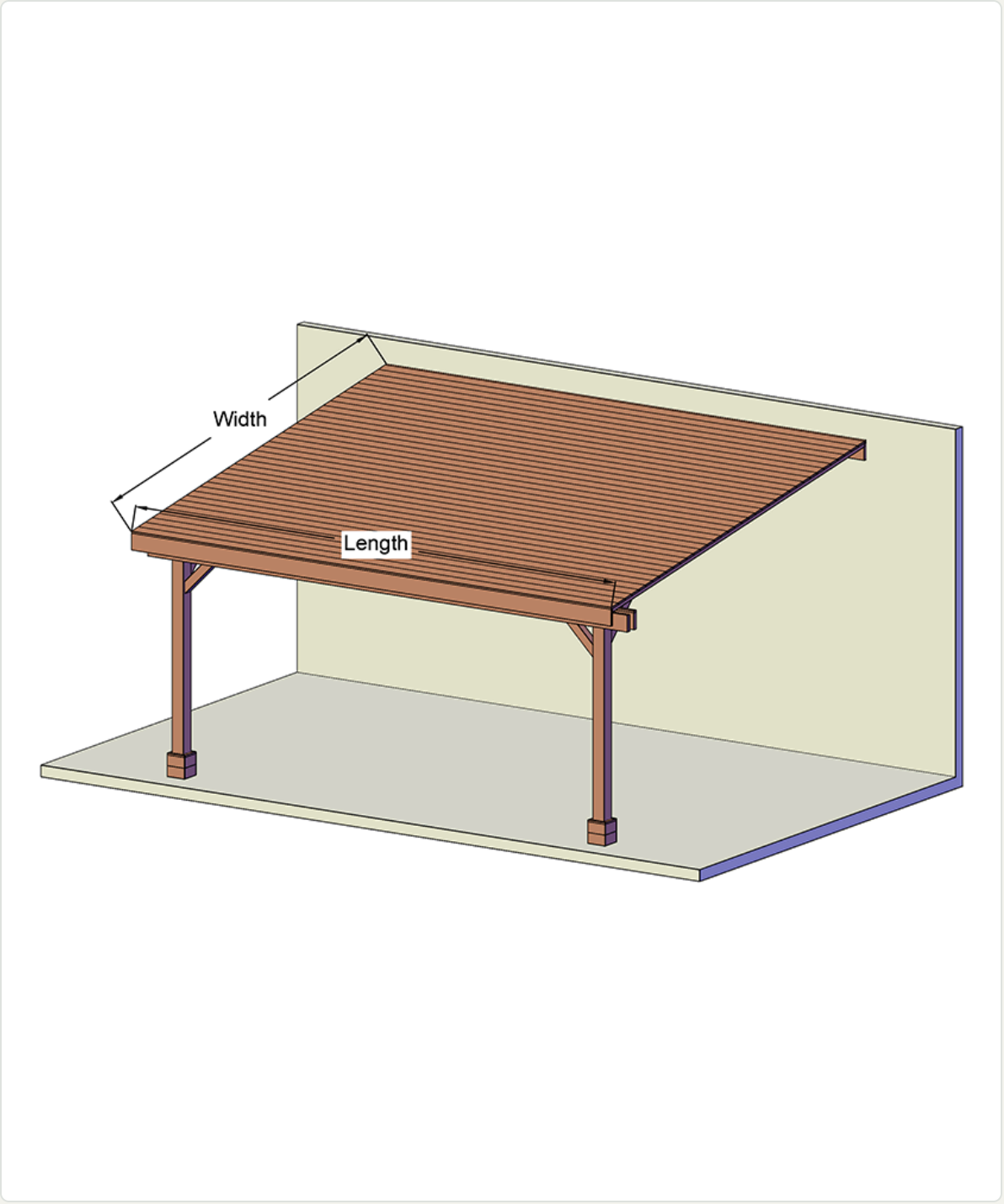

ISOMETRIC VIEW

TOP VIEW

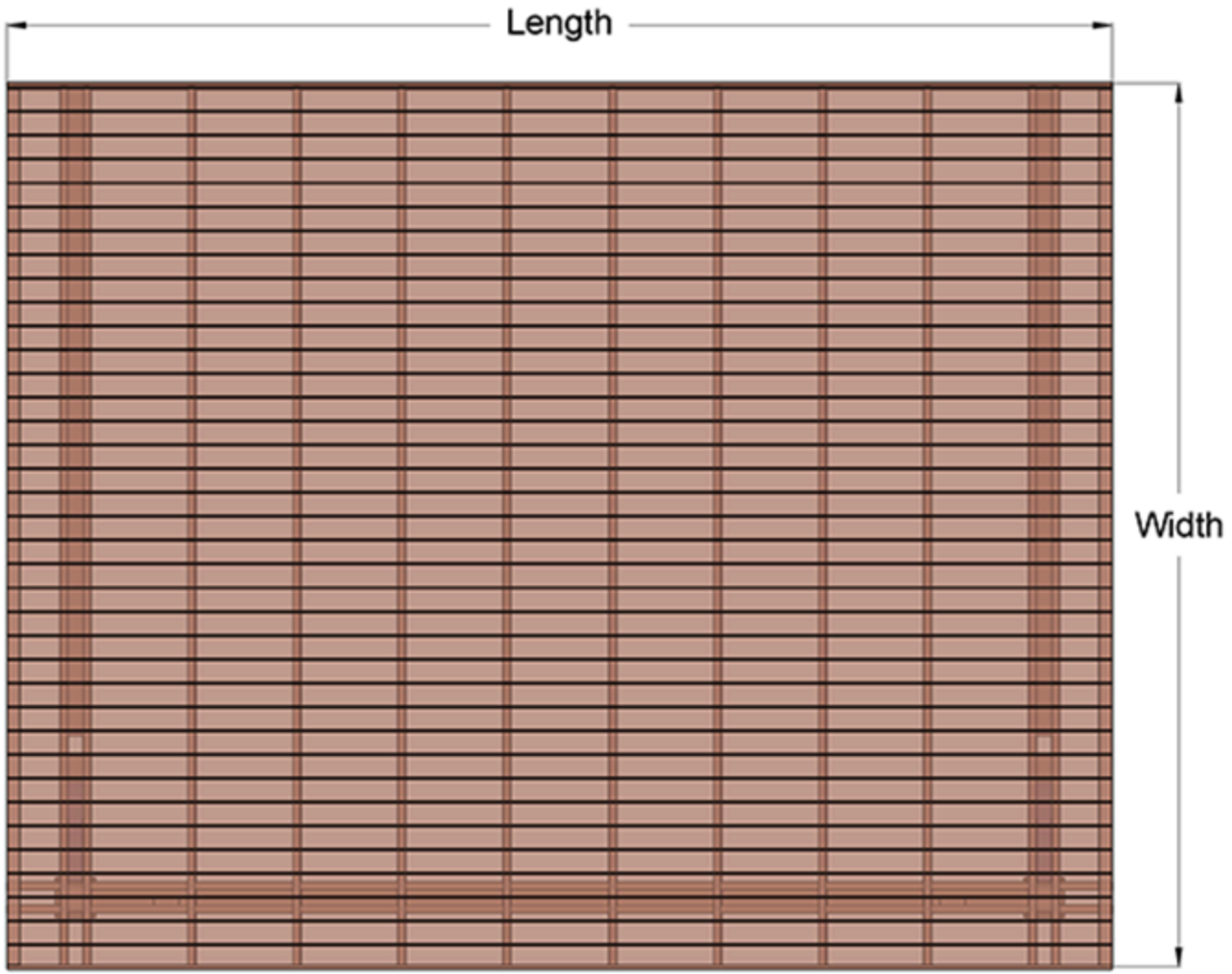

LENGTH VIEW

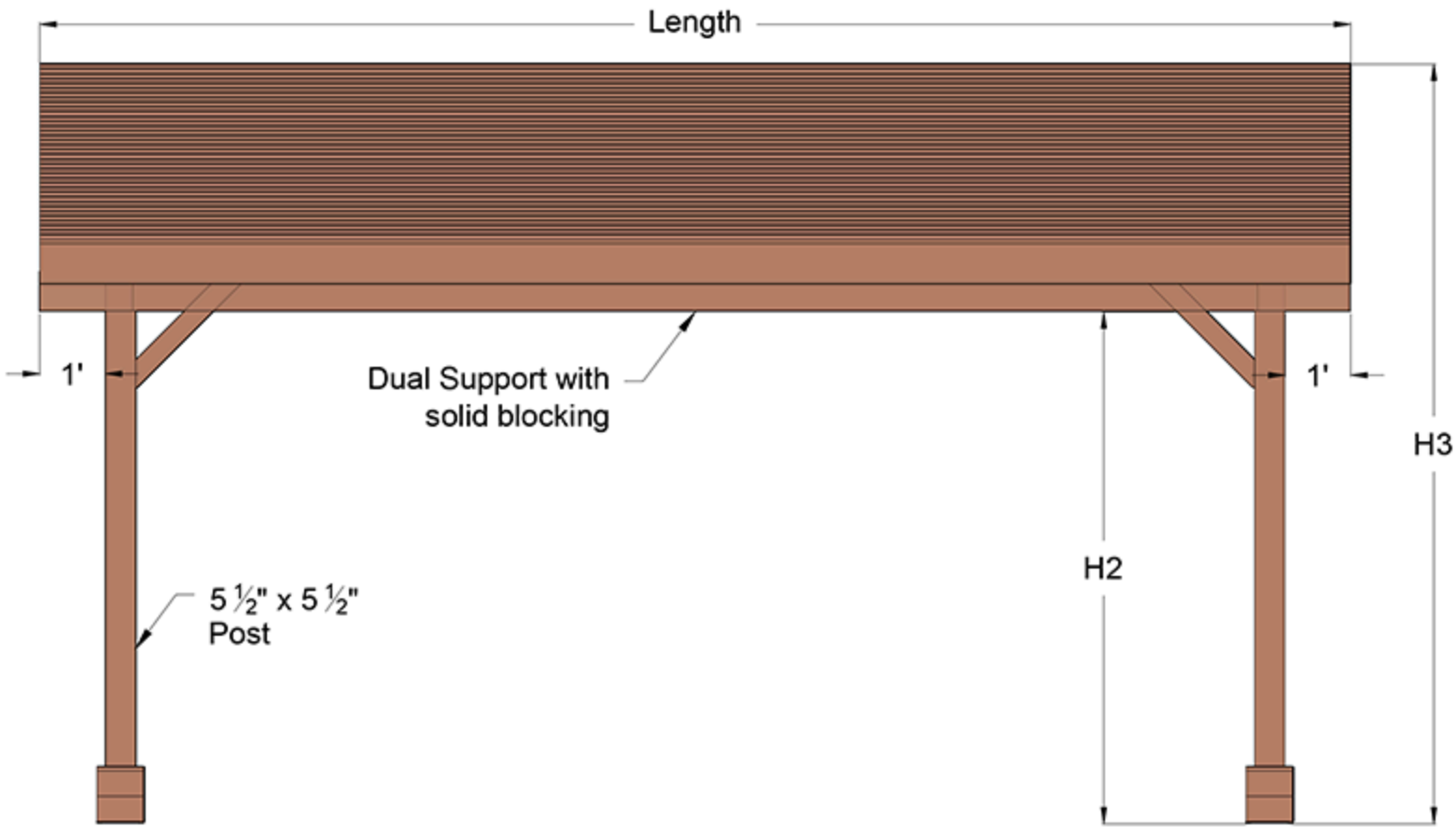

WIDTH VIEW

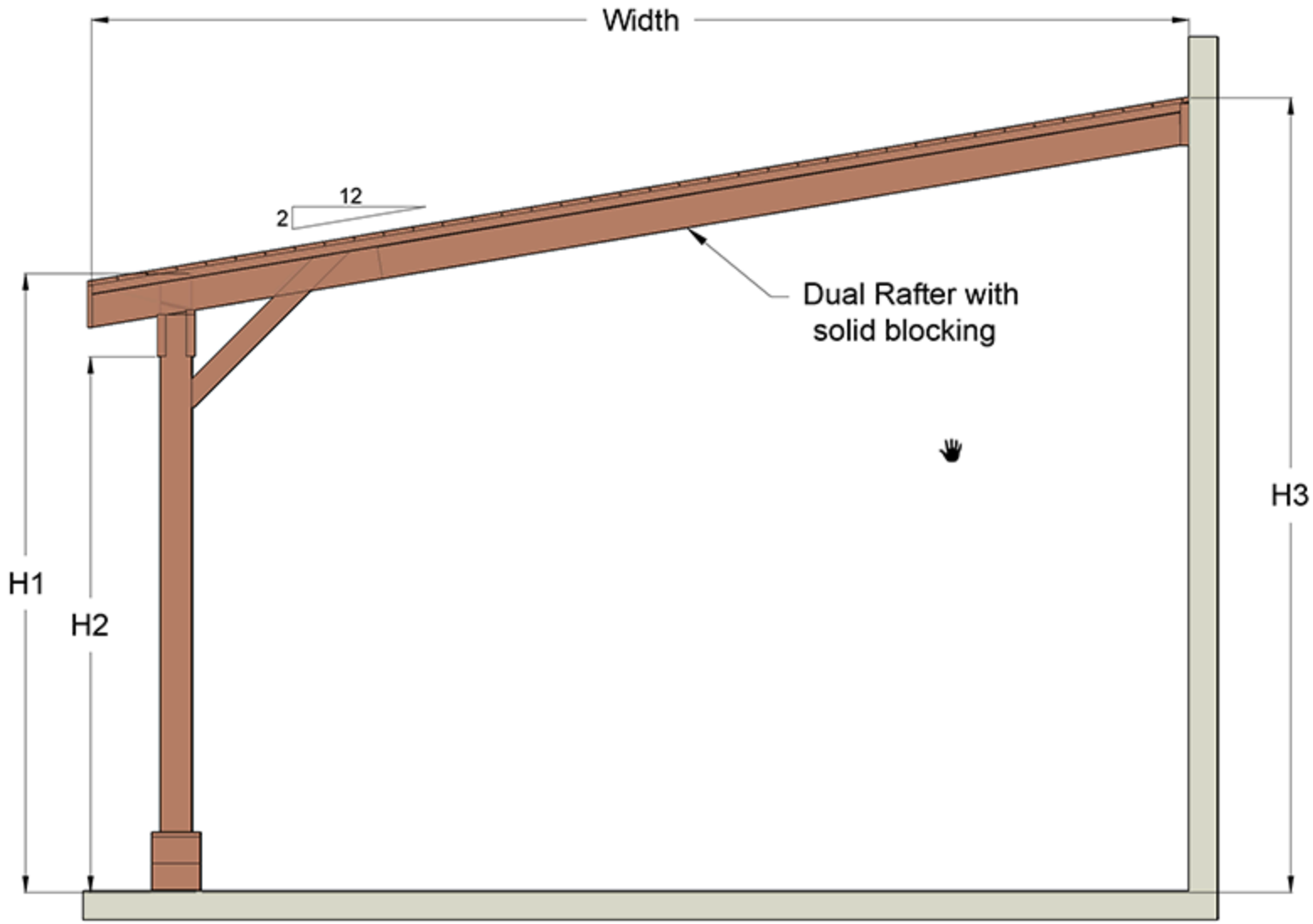

ISOMETRIC VIEW

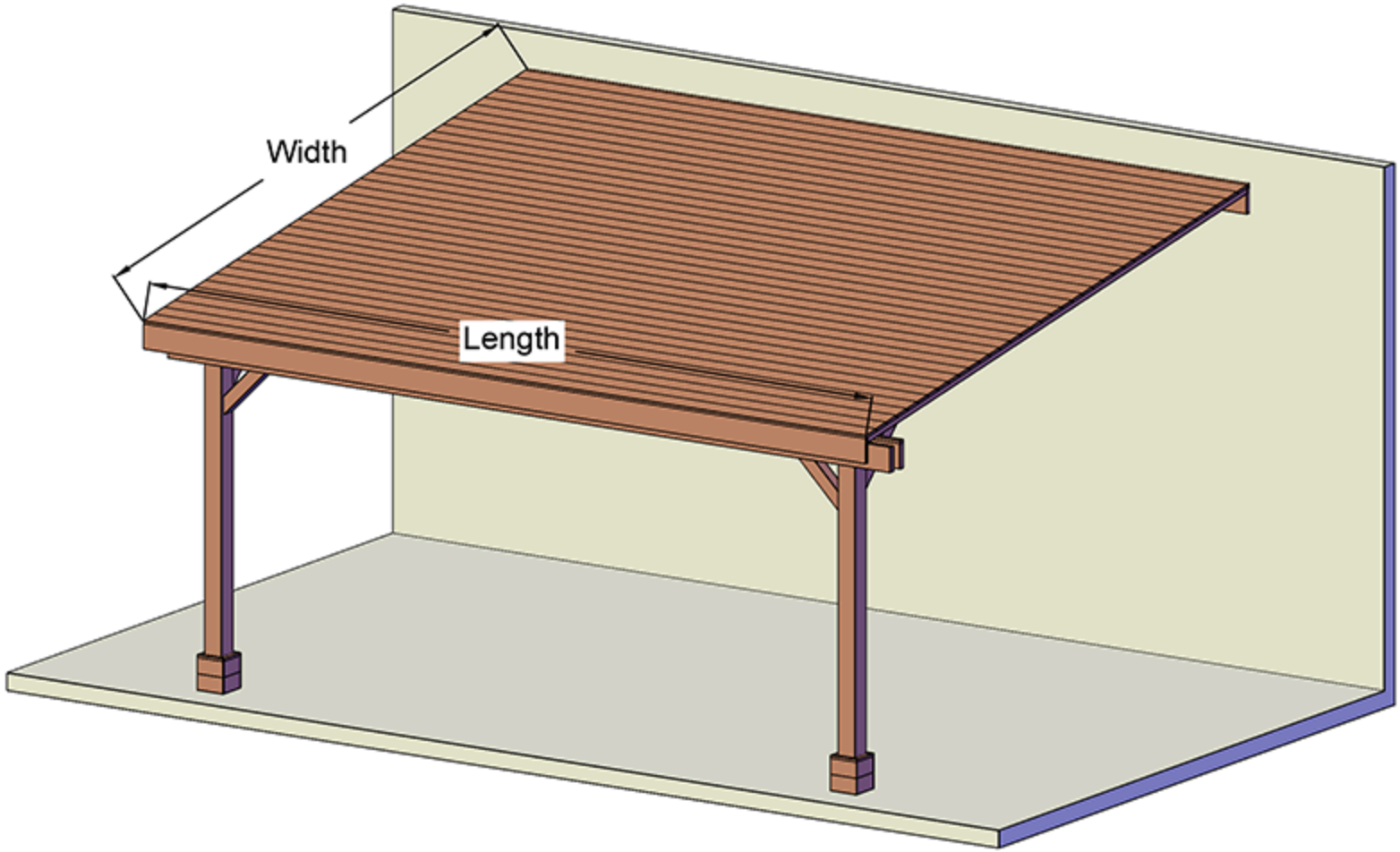

TOP VIEW

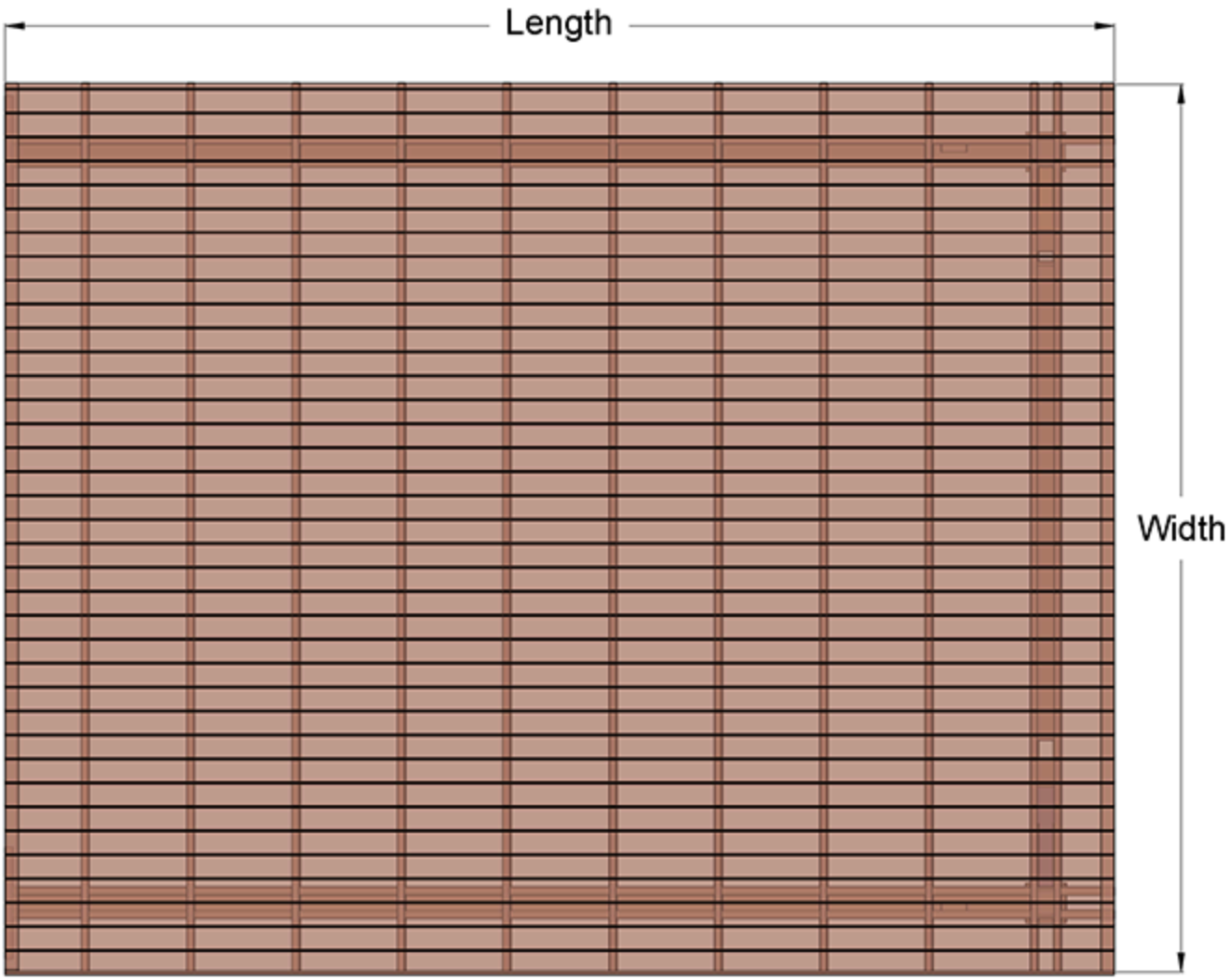

LENGTH VIEW

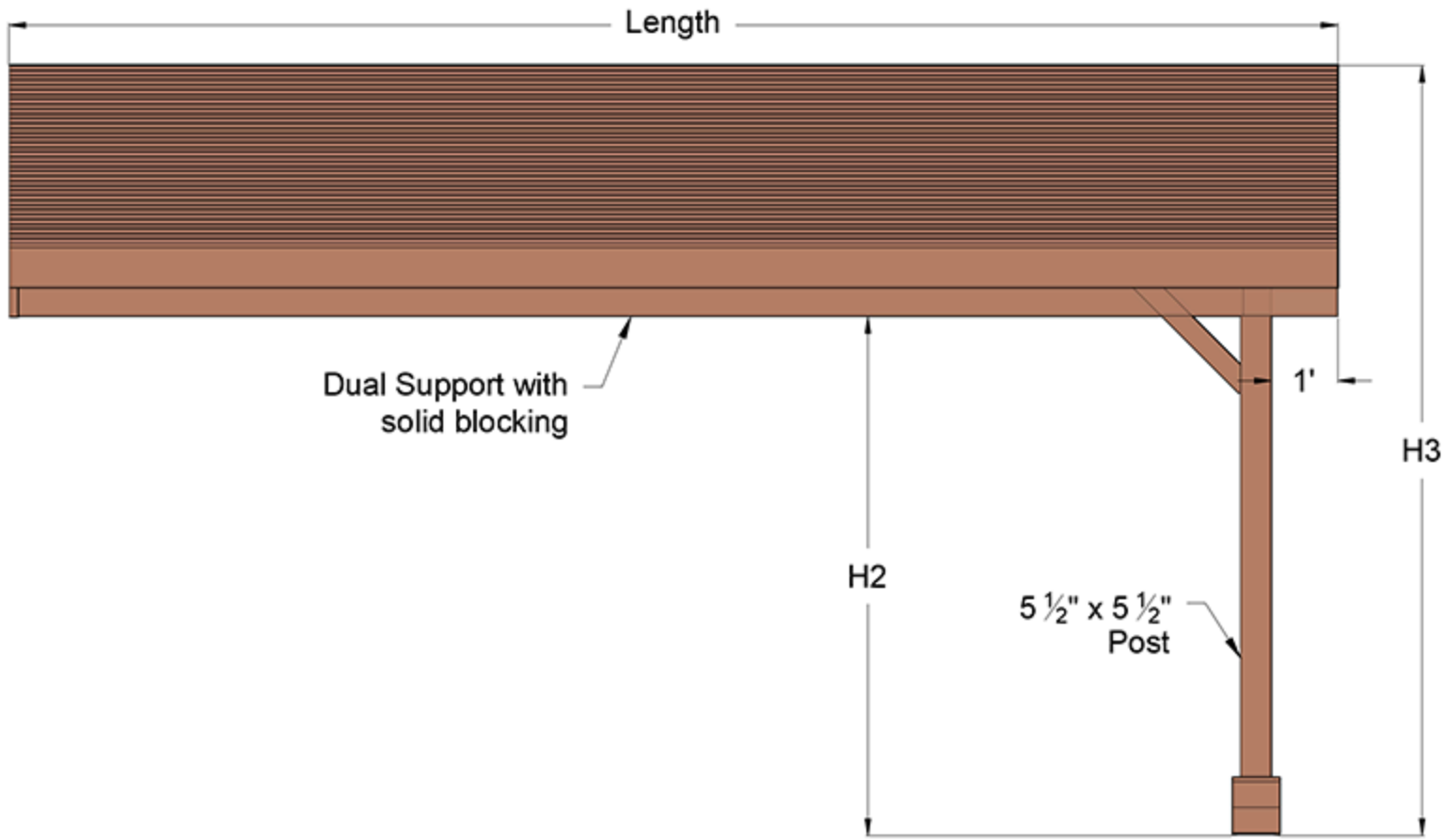

WIDTH VIEW

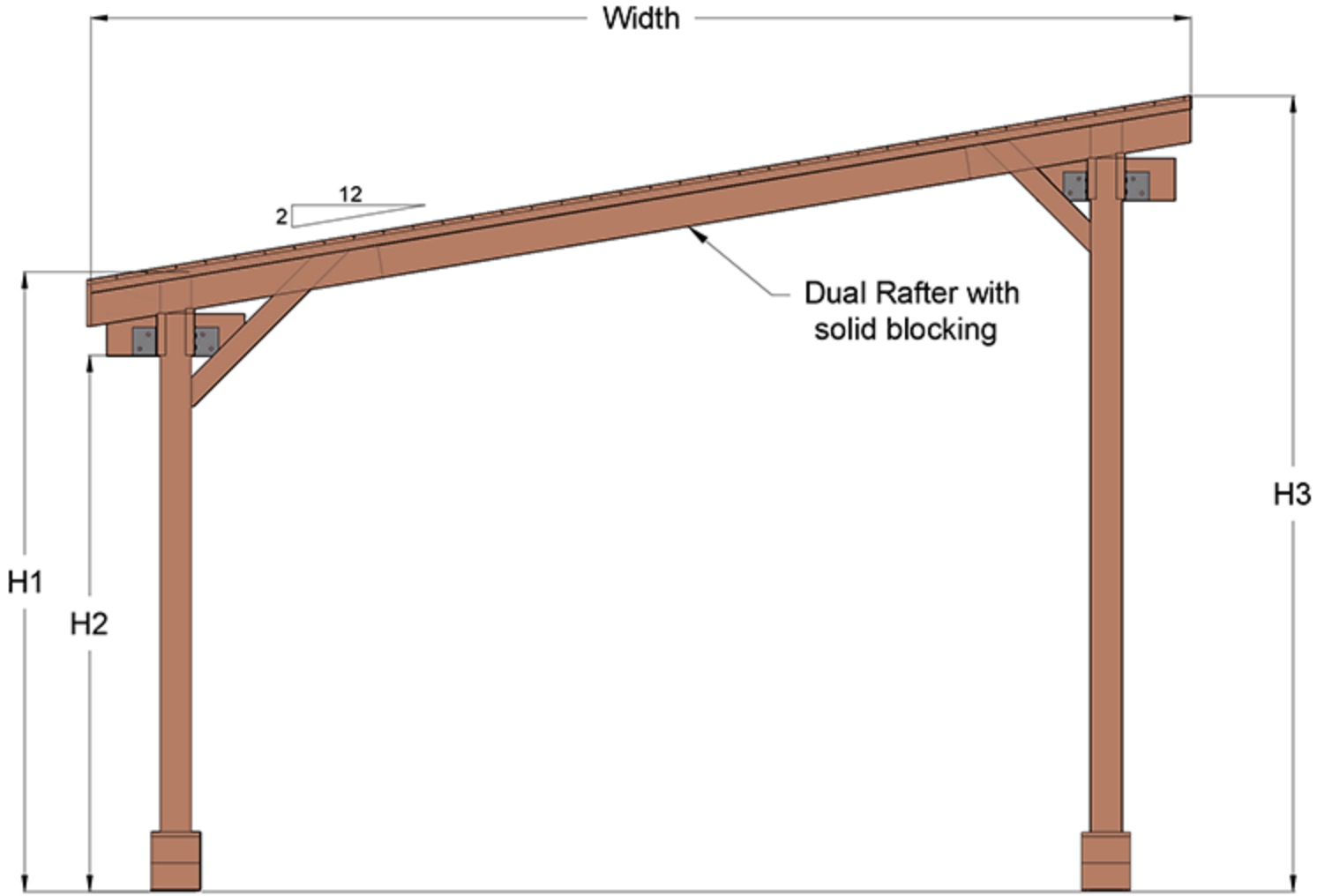

ISOMETRIC VIEW

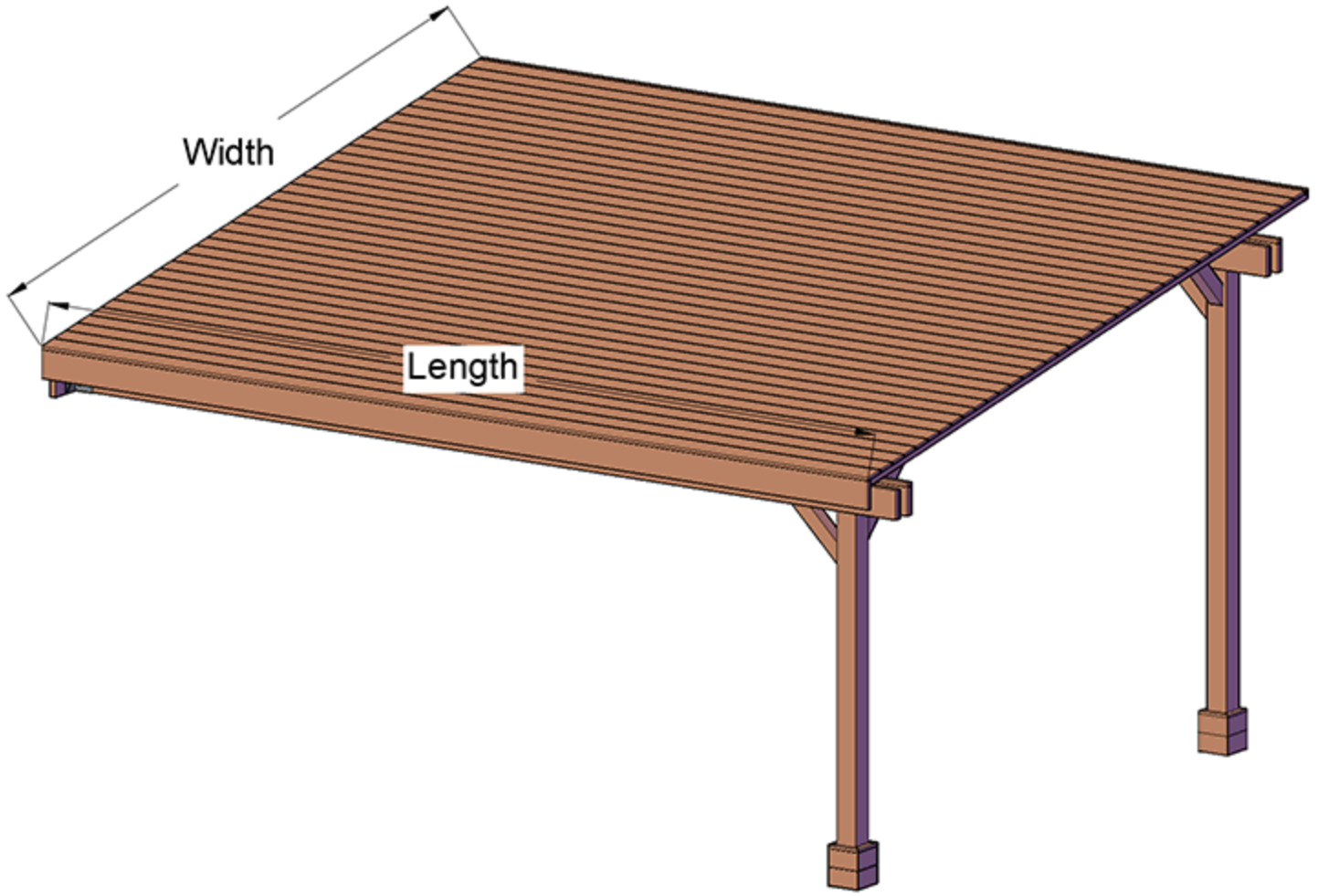

DRAWING 9

For additional long-term structural strength, we add solid timber blocking in-between the dual support timbers as shown in the drawing below. With this blocking, the dual supports are in effect converted into one solid 7 1/4 inch x 6 1/2 inch timber as shown below:

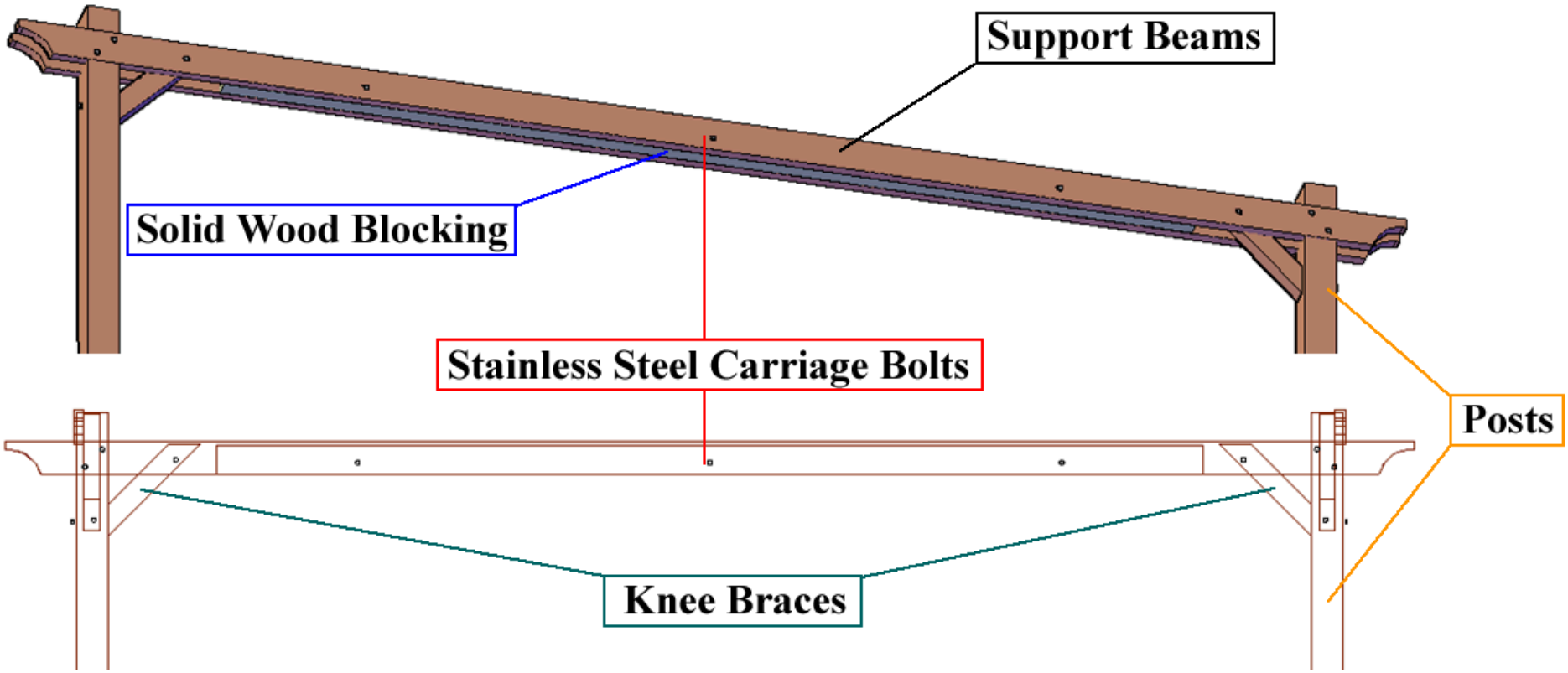

MEASUREMENTS

THE SUNSET PATIO PAVILION SPECIFICATIONS TABLE			
H1 - Posts Height (ft)	**H2 - Height (ft) From Floor Up To Support Base**	**Width (ft)**	**H3 - Total Height (ft)**
9	7.8	8	10.24
9	7.8	10	10.57
9	7.8	12	10.91
9	7.8	14	11.24
9	7.8	15	11.41
9	7.8	16	11.58
9	7.8	18	11.91
9	7.8	20	12.25
9	7.8	22	12.58
9	7.8	24	12.92