FOREVER REDWOOD

DIMENSIONS & DRAWINGS

Wooden Dome Pergola

When we receive any Pergola order, we will provide you with a detailed set of drawings based on the options and sizes chosen. The drawings will clearly show all the details and dimensions from 3 different angles. They are an excellent tool for you to double check everything to be sure it is exactly as you'd like before it is built. Drawings are emailed within 5 business days and we'll revise your drawings as needed to make sure all details and sizing issues are perfected prior to beginning construction.

Perspective View with Measures	2
Top view Purling Slats Measures	3
Top View with Slats Measures	4
Isometric View	5
Isometric View With Sopports, Posts and Arched Rafters Measures	6
Isometric View WIth SLats and Overhang Measures	7
Isometric View WIth Slats and Overhang Measures	8
Isometric View WIth Slats and Overhang Measures	9



ISOMETRIC VIEW

PERSPECTIVE VIEW WITH MEASURES

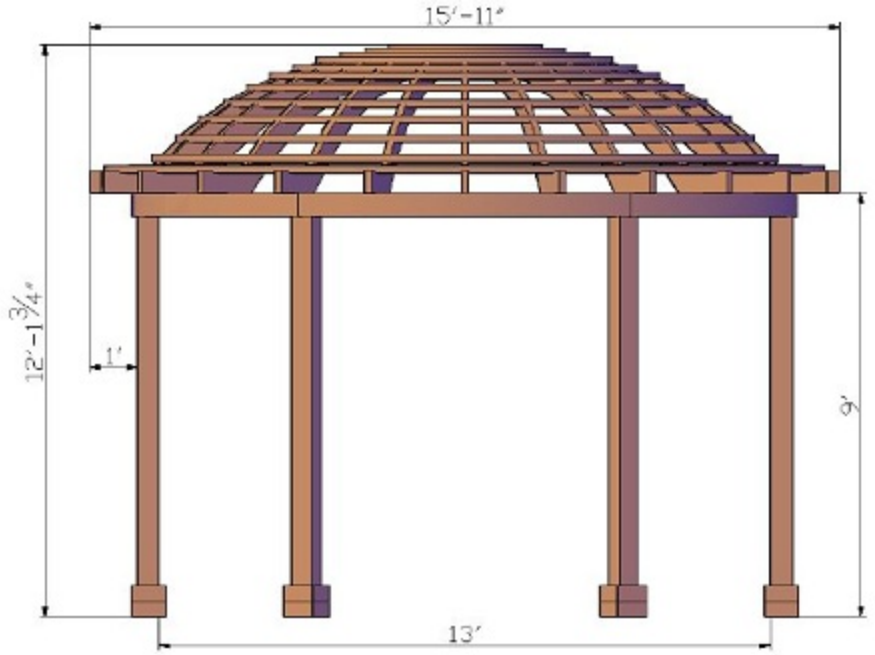

TOP VIEW PURLING SLATS MEASURES

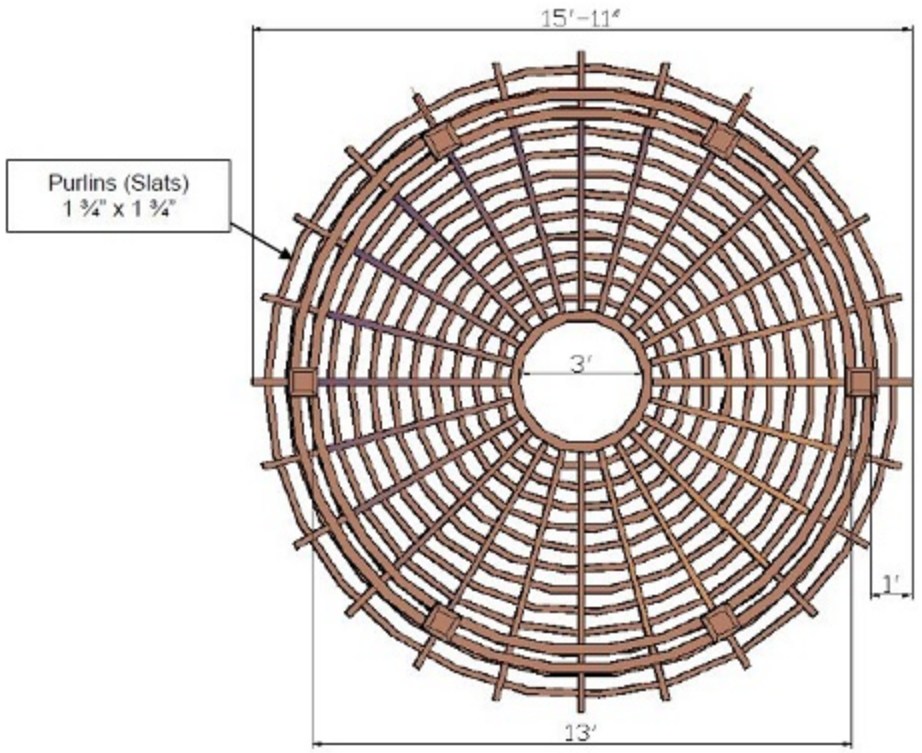

TOP VIEW WITH SLATS MEASURES

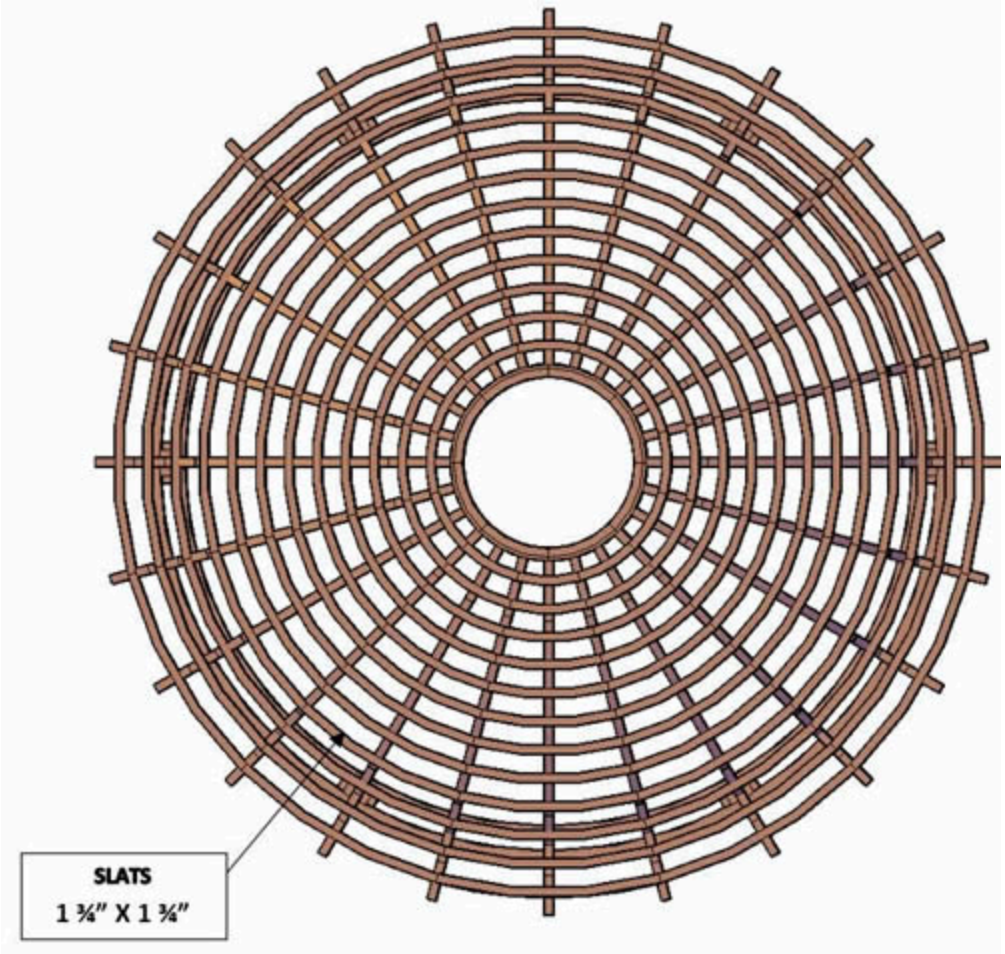

ISOMETRIC VIEW

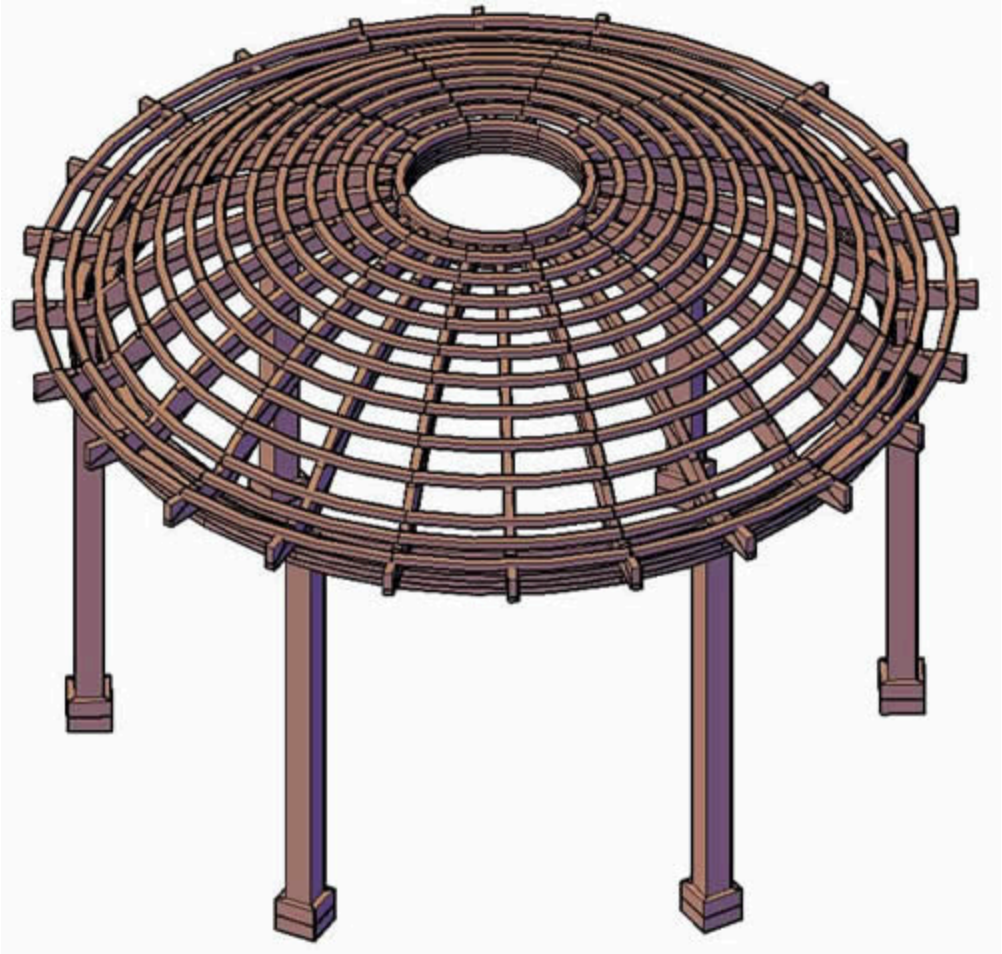

ISOMETRIC VIEW WITH SOPPORTS, POSTS AND ARCHED RAFTERS MEASURES

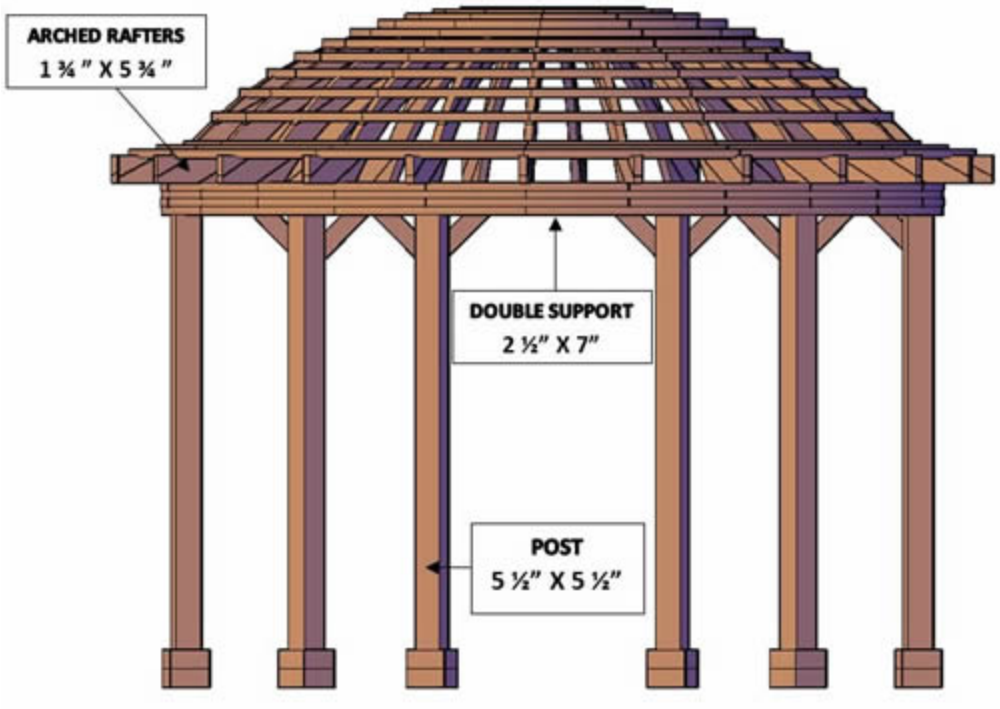

ISOMETRIC VIEW WITH SLATS AND OVERHANG MEASURES

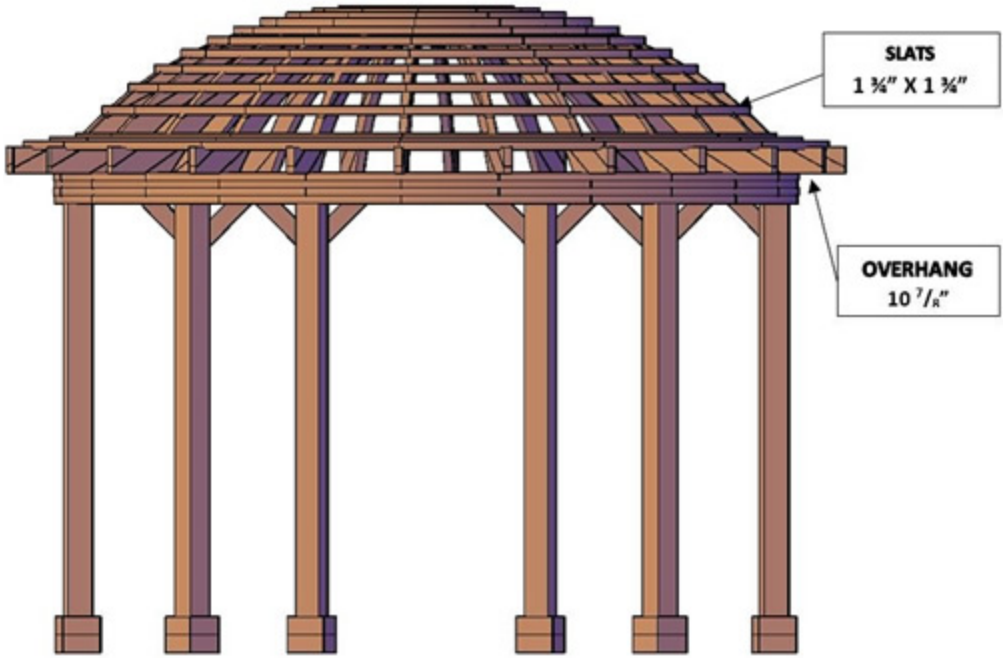

ISOMETRIC VIEW WITH SLATS AND OVERHANG MEASURES

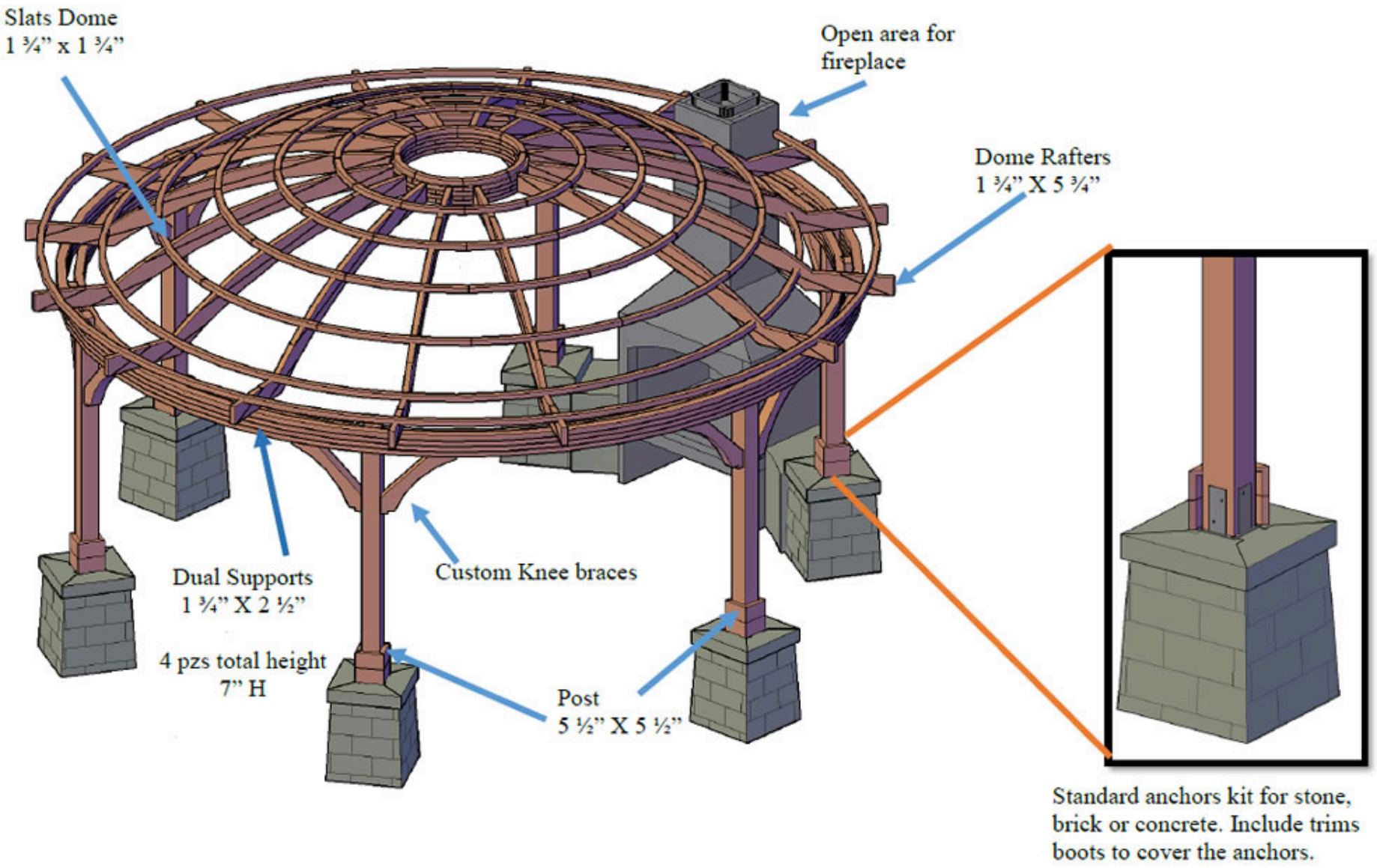

ISOMETRIC VIEW WITH SLATS AND OVERHANG MEASURES

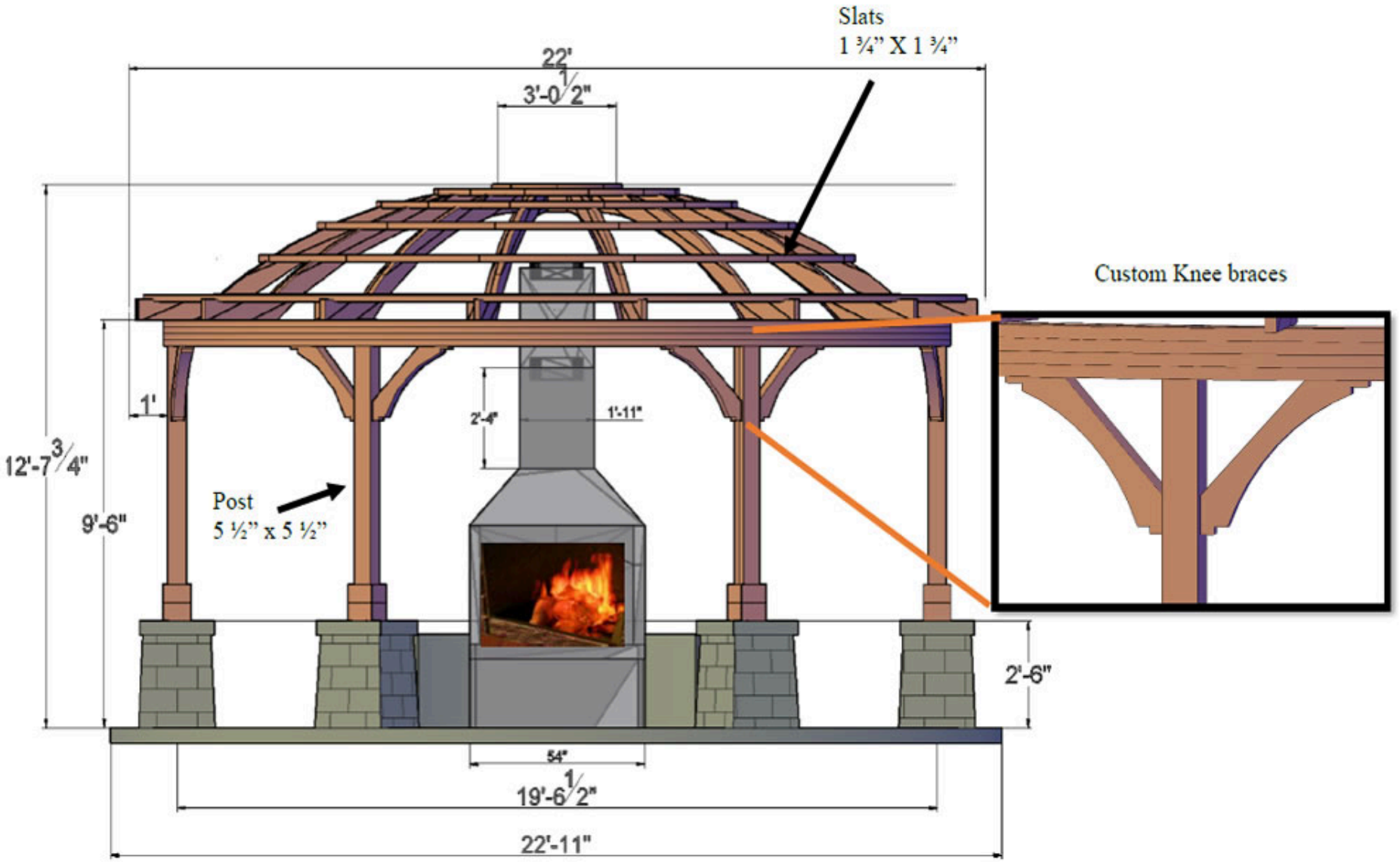

ISOMETRIC VIEW WITH SLATS AND OVERHANG MEASURES

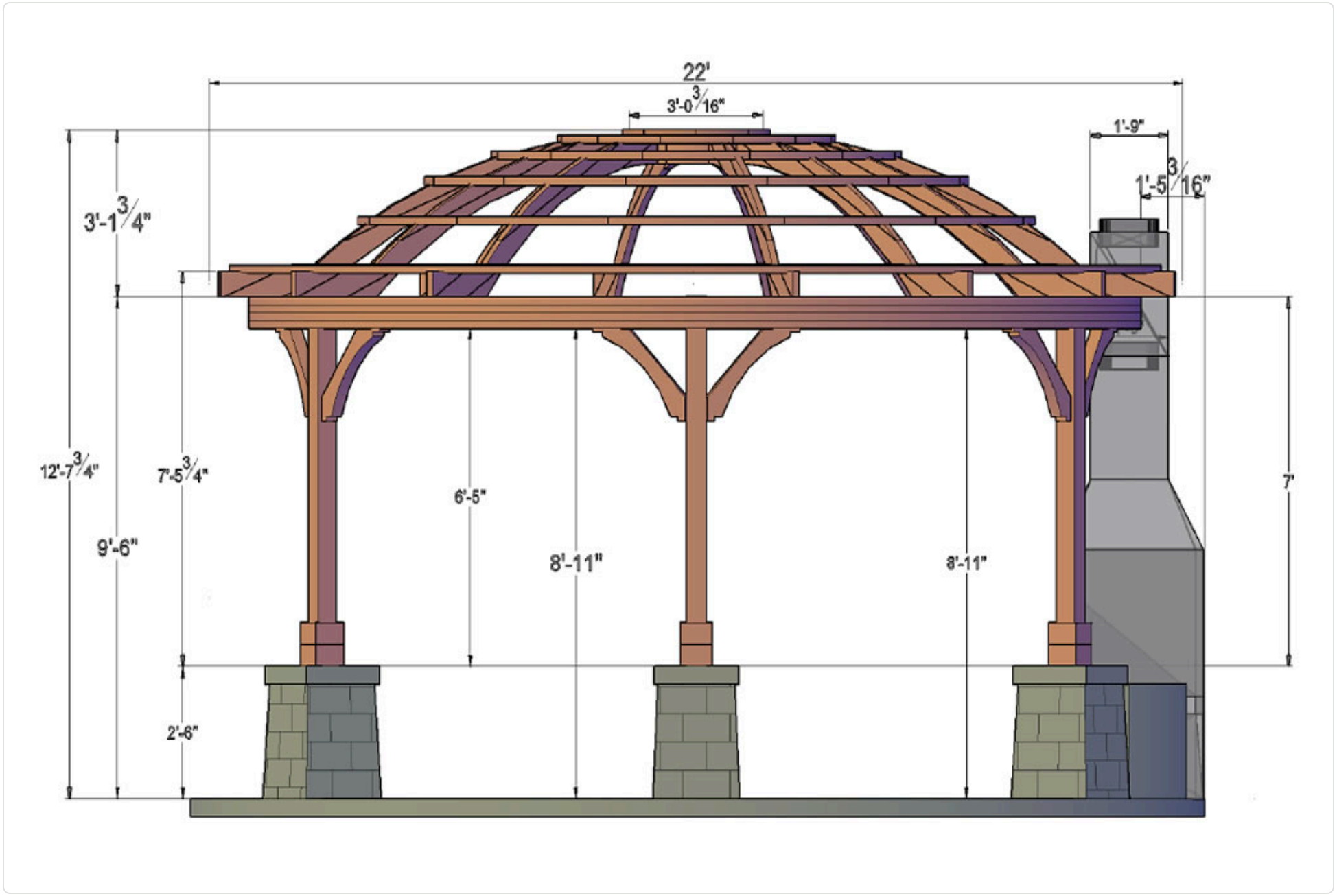

ISOMETRIC VIEW WITH SLATS AND OVERHANG MEASURES

Post Positions

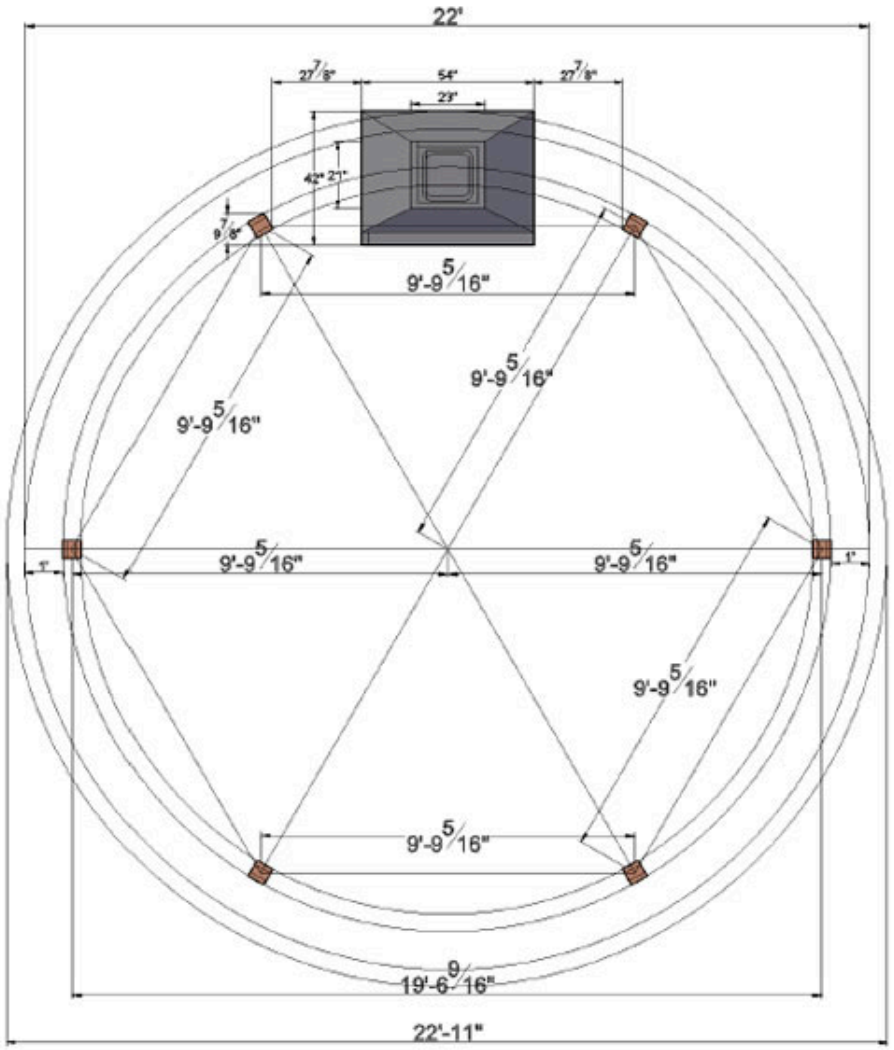

Fireplace projection

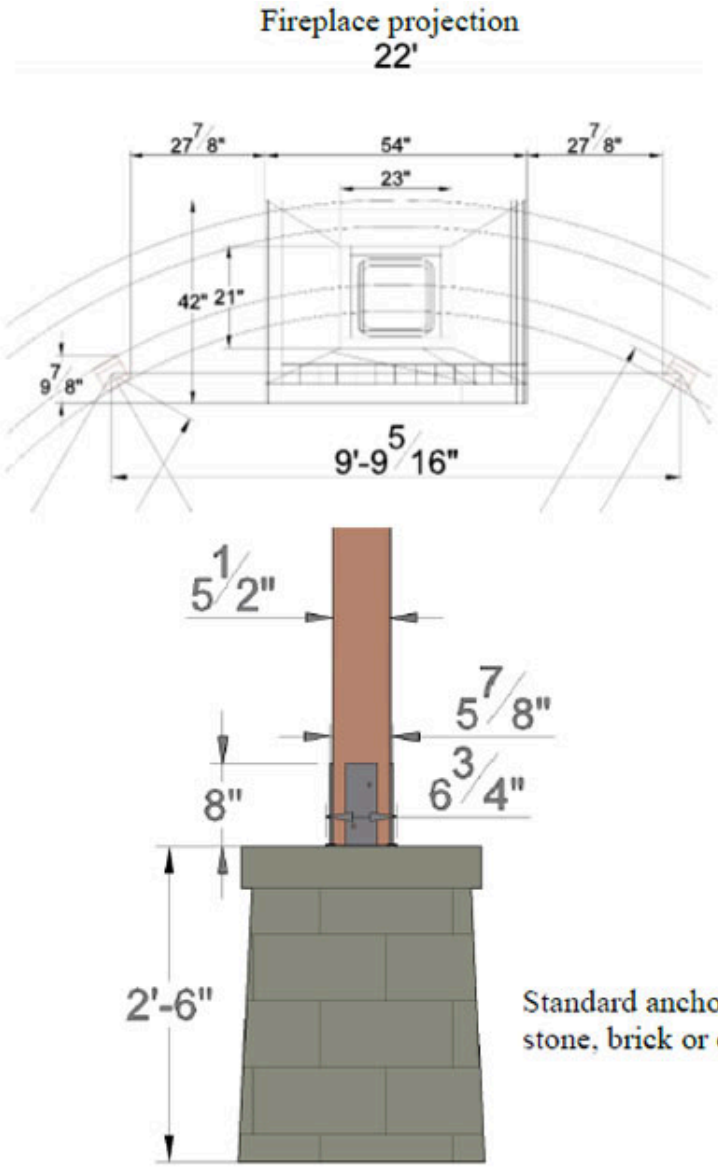

ISOMETRIC VIEW WITH SLATS AND OVERHANG MEASURES

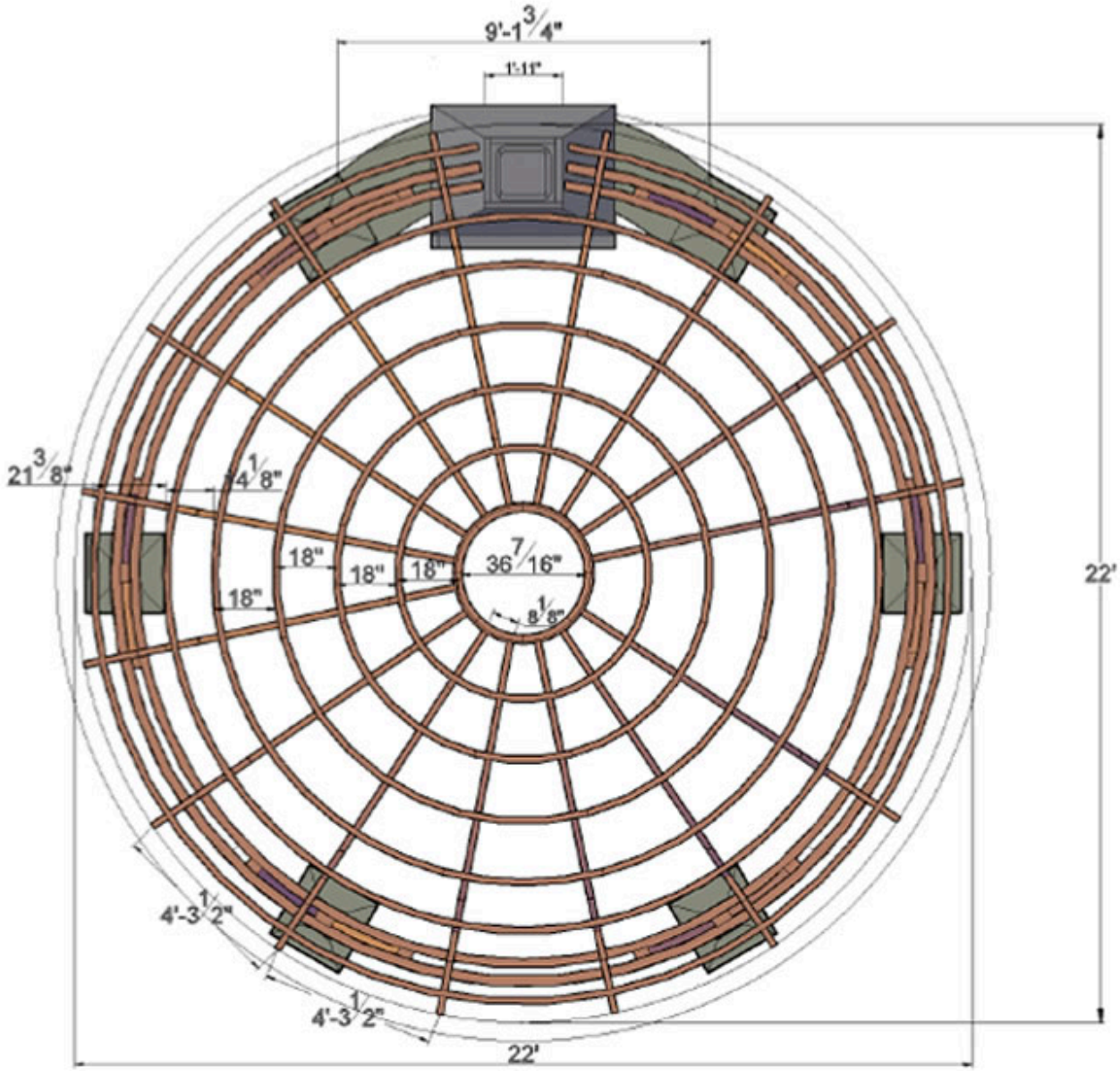

DRAWING 12

Forever Redwood Pergola kits are completely assembled in the shop prior to shipping to be certain everything fits together perfectly. All timbers are notched into one another to increase structural strength and to lock all your pergolas timbers in place so they will never sag, twist or move. There are hundreds of notches in the larger pergolas. Full notching is rarely practiced because it is labor intensive, but it is one of the secrets to a long lasting beautiful pergola.

For additional long-term structural strength, we add solid timber blocking in-between the dual support timbers as shown in the drawing below. With this blocking, the dual supports are in effect converted into one solid 5 3/4 inch x 61/2 inch or 7 1/4 inch x 6 1/2 inch timber as shown below:

