FOREVER REDWOOD

DIMENSIONS & DRAWINGS

Viking Pergola DIY Kits

We customize our Pergolas to suit your needs. Just tell us what size and options you want. Prior to building, we provide our customers with a detailed set of drawings based on their initial choices and sizes. Our drawing process is the perfect tool to show you every detail and dimension from multiple angles. It gives you the freedom to visualize each detail, making sure that everything is exactly as you'd like before we get the go-ahead to begin building. Drawings are emailed within 5 business days, and we'll revise your drawings as much as needed to make sure all detail and sizing issues are perfected prior to beginning construction.

Drawing 1	2
Drawing 2	3
Drawing 3	4
Drawing 4	5
Measurements	6

foreverredwood.com · (866) 332-2403

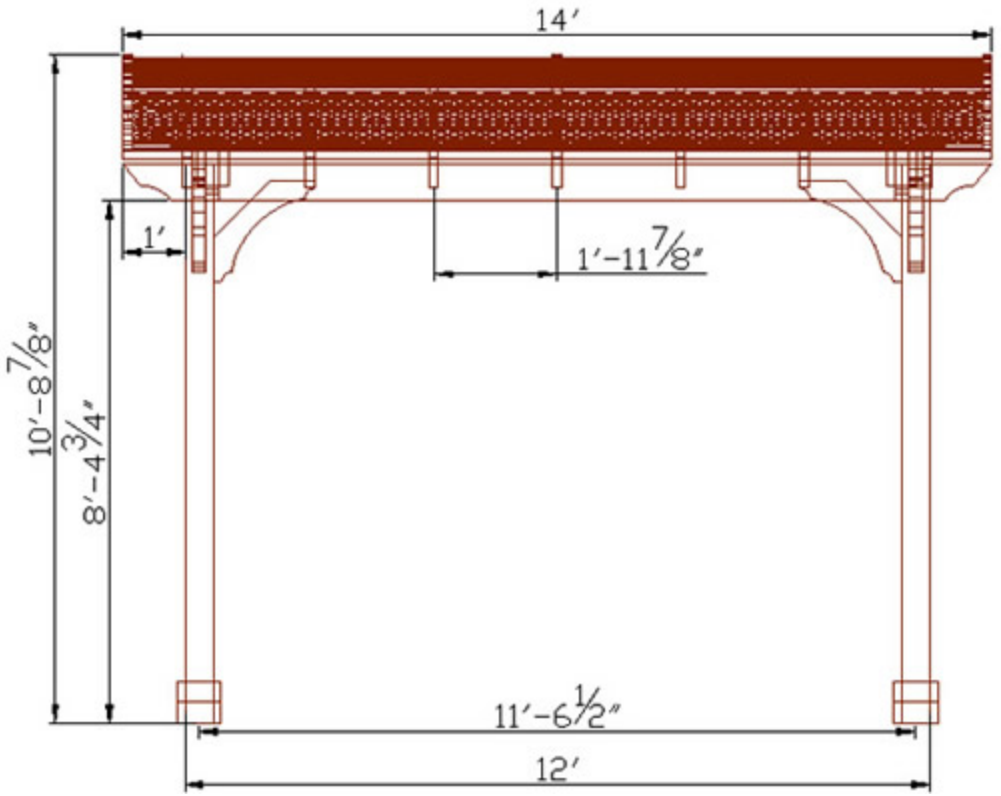

DRAWING 1

DRAWING 1

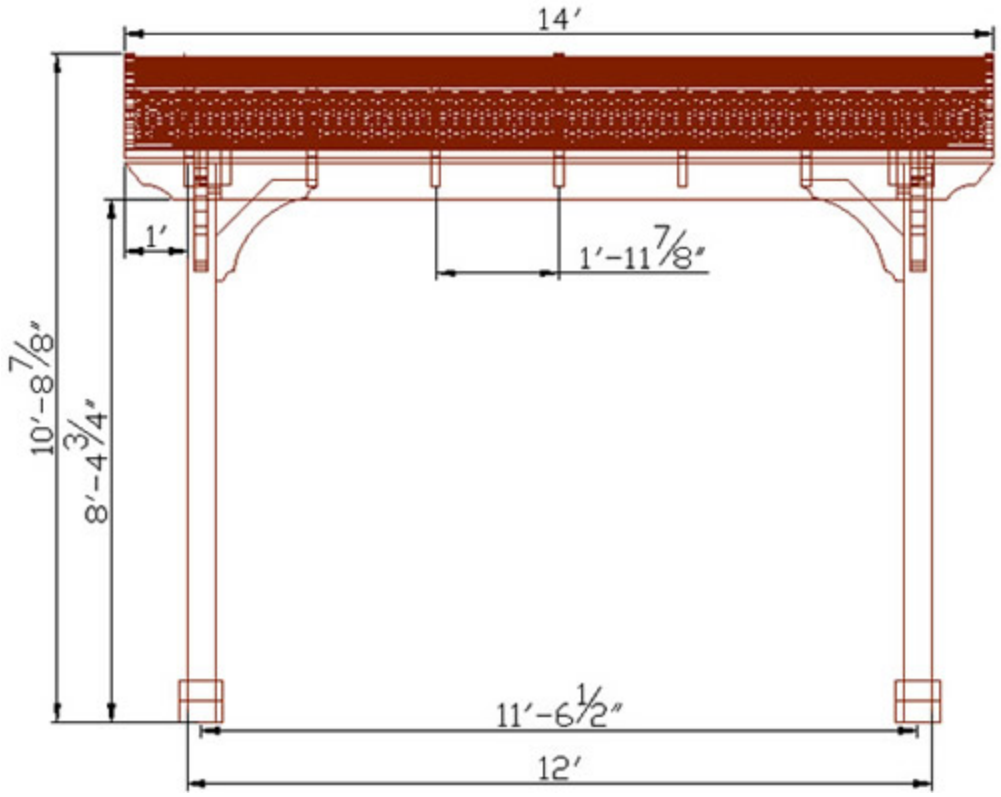

DRAWING 2

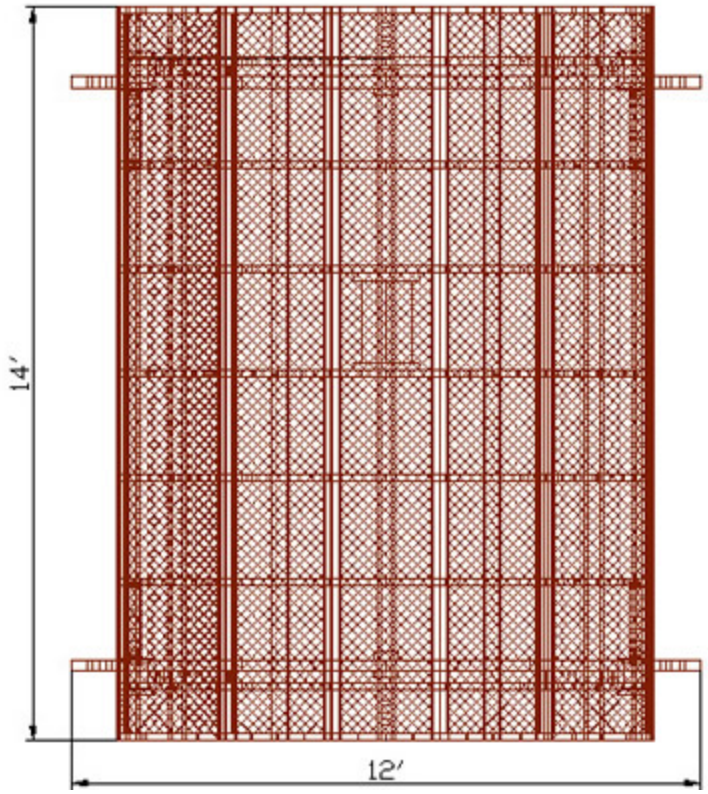

DRAWING 3

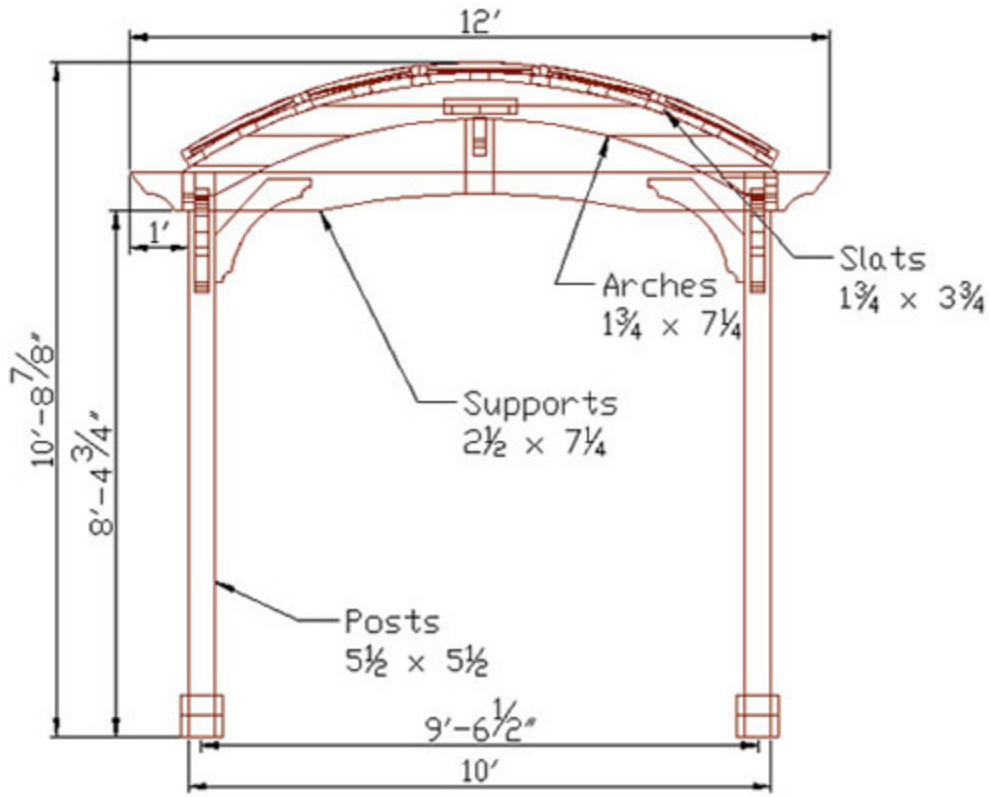
12′
1′
Slats
1¾ × 3¾
Arches
1¾ × 7¼
Supports
2½ × 7¼
Posts
5½ × 5½
10′-8 7/8″
8′-4 3/4″
9′-6 1/2″
10′

DRAWING 4



MEASUREMENTS

Structures over 16 ft have 6 x 6 posts with 3 x 8 supports and 2 x 8 rafters.

Structures 16 ft and shorter have 6 x 6 posts with 3 x 8 supports and 2 x 6 rafters.

If you prefer a different sizing or style write what you would like in the comments section or contact us.

Posts normally ship 9' long. 9 posts make the top of the roof 9' also and give you an 8' 4" clearance under the supports. About 90% of our pergola customers go with the default 9' post height. If you'd like your pergola taller or shorter, just select Other Height and write in what you would like in the comments section.

In most cases, the maximum roof size is 20' in either direction with a 4 post structure. The maximum span (with the standard timber sizes mentioned above) is 18' 2 1/2" on center between posts. Structures over 20' in any direction are built with an additional post to support roofs between 20 and 40 feet. For example, a 30' x 20' free standing pergola has 6 posts. If you wish to build the arched portion of the roof over 20 ft, with some design modifications, the arches can be expanded out to 28 ft without adding an additional post. Let us know if you require this type of design work.

Forever Redwood Pergola kits are completely assembled in the shop prior to shipping to be certain that everything fits together perfectly. All timbers are notched into one another to increase structural strength and to lock all your pergolas timbers in place so they will never sag, twist or move. There are hundreds of notches in the larger pergolas. Full notching is rarely practiced because it is labor intensive, but it is one of the secrets to a long lasting beautiful pergola.